ASRock

B550M WiFi

MOTHERBOARD

User Manual

Contact Information

If you need to contact ASRock or want to know more about ASRock, you're welcome to visit ASRock's website at http://www.asrock.com; or you may contact your dealer for further information. For technical questions, please submit a support request form at https://event.asrock.com/tsd.asp

ASRock Incorporation

e-mail: info@asrock.com.tw

ASRock EUROPE B.V.

e-mail: sales@asrock.nl

ASRock America, Inc.

e-mail: sales@asrockamerica.com

Scan the QR code to view more manuals and documents.

Contents

Chapter 1 Introduction **1**

1.1 Package Contents 1

1.2 Specifications 2

1.3 Motherboard Layout 7

1.4 I/O Panel 9

1.5 Block Diagram 11

1.6 802.11axe Wi-Fi 6E Module and ASRock WiFi 2.4/5/6 GHz Antennas 12

Chapter 2 Installation **14**

2.1 Installing the CPU 15

2.2 Installing the CPU Fan and Heatsink 17

2.3 Installing Memory Modules (DIMM) 25

2.4 Connecting the Front Panel Header 28

2.5 Installing the I/O Panel Shield 29

2.6 Installing the Motherboard 30

2.7 Installing SATA Drives 31

2.8 Installing a Graphics Card 33

2.9 Connecting Peripheral Devices 35

2.10 Connecting the Power Connectors 36

2.11 Power On 37

2.12 Jumpers Setup 38

2.13 Onboard Headers and Connectors 39

2.14 Post Status Checker 52

2.15 M.2 SSD Installation Guide (M2_1) 53

Chapter 1 Introduction

Thank you for purchasing ASRock B550M WiFi motherboard, a reliable motherboard produced under ASRock's consistently stringent quality control. It delivers excellent performance with robust design conforming to ASRock's commitment to quality and endurance.

Because the motherboard specifications and the BIOS software might be updated, the content of this documentation will be subject to change without notice. In case any modifications of this documentation occur, the updated version will be available on ASRock's website without further notice. If you require technical support related to this motherboard, please visit our website for specific information about the model you are using. You may find the latest VGA cards and CPU support list on ASRock's website as well. ASRock website http://www.asrock.com.

1.1 Package Contents

- ASRock B550M WiFi Motherboard (Micro ATX Form Factor)
- 1 x I/O Panel Shield
- 2 x Serial ATA (SATA) Data Cables (Optional)
- 2 x ASRock WiFi 2.4/5/6 GHz Antennas (Optional)

1.2 Specifications

Platform	• Micro ATX Form Factor • 2oz Copper PCB
CPU	• Supports AMD AM4 Socket Ryzen™ 3000, 3000 G-Series, 4000 G-Series, 5000 and 5000 G-Series Desktop Processors* * Please refer to CPU support list for details.
Chipset	• AMD B550
Memory	• Dual Channel DDR4 Memory Technology • 4 x DDR4 DIMM Slots • AMD Ryzen series CPUs (Vermeer) support DDR4 4533+(OC)/4466(OC)/4400(OC)/4333(OC)/4266(OC)/4200(OC)/4133(OC)/4000(OC)/3866(OC)/3800(OC)/3733(OC)/3600(OC)/3466(OC)/3200/2933/2667/2400/2133 ECC & non-ECC, un-buffered memory* • AMD Ryzen series CPUs (Matisse) support DDR4 4533+(OC)/4466(OC)/4400(OC)/4333(OC)/4266(OC)/4200(OC)/4133(OC)/4000(OC)/3866(OC)/3800(OC)/3733(OC)/3600(OC)/3466(OC)/3200/2933/2667/2400/2133 ECC & non-ECC, un-buffered memory* • AMD Ryzen series APUs (Cezanne) support DDR4 4733+(OC)/4666(OC)/4600(OC)/4533(OC)/4466(OC)/4400(OC)/4333(OC)/4266(OC)/4200(OC)/4133(OC)/4000(OC)/3866(OC)/3800(OC)/3733(OC)/3600(OC)/3466(OC)/3200/2933/2667/2400/2133 ECC & non-ECC, un-buffered memory* • AMD Ryzen series APUs (Renoir) support DDR4 4733+(OC)/4666(OC)/4600(OC)/4533(OC)/4466(OC)/4400(OC)/4333(OC)/4266(OC)/4200(OC)/4133(OC)/4000(OC)/3866(OC)/3800(OC)/3733(OC)/3600(OC)/3466(OC)/3200/2933/2667/2400/2133 ECC & non-ECC, un-buffered memory* • AMD Ryzen series APUs (Picasso) support DDR4 3333+(OC)/3200(OC)/2933/2667/2400/2133 non-ECC, un-buffered memory*

	* For Ryzen Series APUs (Picasso, Cezanne and Renoir), ECC is only supported with PRO CPUs. * Please refer to Memory Support List on ASRock's website for more information. (http://www.asrock.com/) * Please refer to page 25 for DDR4 UDIMM maximum frequency support. • Max. capacity of system memory: 128GB • Supports Extreme Memory Profile (XMP) memory modules • 15µ Gold Contact in DIMM Slots
Expansion Slot	CPU: • 1 x PCIe 4.0 x16 Slot (PCIE1), supports x16 mode* Chipset: • 1 x PCIe 3.0 x16 Slot (PCIE3), supports x4 mode* • 1 x PCIe 3.0 x1 Slot (PCIE2) * PCIE1 will run at Gen4x16 with Vermeer and Matisse, Gen3x16 with Cezanne and Renoir and Gen3x8 with Picasso. * Supports NVMe SSD as boot disks • Supports AMD CrossFire™ • 1 x M.2 Socket (Key E), supports type 2230 WiFi/BT PCIe WiFi module
Graphics	• Integrated AMD Radeon™ Vega Series Graphics in Ryzen Series APU (Actual support may vary by CPU) • Supports HDMI 2.1 with max. resolution up to 4K x 2K (4096x2160) @ 60Hz • Supports DisplayPort 1.4 with max. resolution up to 5K (5120x2880)@120Hz
Audio	• 7.1 CH HD Audio with Content Protection (Realtek ALC1220 Audio Codec) • Nahimic Audio
LAN	• PCIE x1 Gigabit LAN 10/100/1000 Mb/s • Realtek RTL8111H

Wireless LAN	• 802.11axe Wi-Fi 6E Module • Supports IEEE 802.11a/b/g/n/ac/ax/axe • Supports Dual-Band 2x2 with extended 6GHz band* support * Wi-Fi 6E (6GHz band) will be supported by Microsoft® Windows® 11. The availability will depend on the different regulation status of each country and region. It will be activated (for supported countries) through Windows Update and software updates once available. * A 6GHz compatible router is required for 6E functionality. • 2 antennas to support 2 (Transmit) x 2 (Receive) diversity technology • Supports Bluetooth 5.2 • Supports MU-MIMO
USB	CPU: • 6 x USB 3.2 Gen1 Type-A (4 Rear (USB3_12 and USB3_34), 2 Front (F_USB3_1_2)) Chipset: • 2 x USB 3.2 Gen1 Type-A (2 Front (F_USB3_3_4) • 6 x USB 2.0 (2 Rear, 4 Front) * All USB ports support ESD Protection
Rear Panel I/O	• 2 x Antenna Ports • 1 x PS/2 Mouse/Keyboard Port • 1 x HDMI Port • 1 x DisplayPort 1.4 • 4 x USB 3.2 Gen1 Ports • 2 x USB 2.0 Ports • 1 x RJ-45 LAN Port • HD Audio Jacks: Line in / Front Speaker / Microphone
Storage	CPU: • 1 x Hyper M.2 Socket (M2_1, Key M), supports type 2280 PCIe Gen4x4 (64 Gb/s) mode* Chipset: • 4 x SATA3 6.0 Gb/s Connectors * Supports NVMe SSD as boot disks

* NVMe SSD is not supported with AMD Athlon™ 3000G Processors
* M2_1 will run at Gen4x4 with Vermeer, Matisse and Gen3x4 with Cezanne, Renoir and Picasso.

RAID	• Supports RAID 0, RAID 1 and RAID 10 for SATA storage devices
Connector	• 1 x COM Port Header • 1 x SPI TPM Header • 1 x Power LED and Speaker Header • 2 x RGB LED Headers* • 2 x Addressable LED Headers** • 1 x CPU Fan Connector (Smart Fan Speed Control)*** • 3 x Chassis/Water Pump Fan Connectors (4-pin) (Smart Fan Speed Control)*** * CHA_FAN1/WP, CHA_FAN2/WP and CHA_FAN4/WP can auto detect if 3-pin or 4-pin fan is in use. • 1 x 24 pin ATX Power Connector • 1 x 8 pin 12V Power Connector • 1 x Front Panel Audio Connector • 2 x USB 2.0 Headers (Support 4 USB 2.0 ports) • 2 x USB 3.2 Gen1 Headers (Support 4 USB 3.2 Gen1 ports) * Supports in total up to 12V/3A, 36W LED Strip ** Support in total up to 5V/3A, 15W LED Strip *** CPU_FAN1 supports the fan power up to 1A (12W). *** CHA_FAN1/WP, CHA_FAN2/WP and CHA_FAN4/WP support the water cooler fan of maximum 2A (24W) fan power. *** CHA_FAN1/WP, CHA_FAN2/WP and CHA_FAN4/WP can auto detect if 3-pin or 4-pin fan is in use.
BIOS Feature	• AMI UEFI Legal BIOS with GUI support

OS	• Microsoft® Windows® 10 64-bit / 11 64-bit
Certifications	• FCC, CE • ErP/EuP ready (ErP/EuP ready power supply is required)

** For detailed product information, please visit our website: http://www.asrock.com*

Please realize that there is a certain risk involved with overclocking, including adjusting the setting in the BIOS, applying Untied Overclocking Technology, or using third-party overclocking tools. Overclocking may affect your system's stability, or even cause damage to the components and devices of your system. It should be done at your own risk and expense. We are not responsible for possible damage caused by overclocking.

1.3 Motherboard Layout

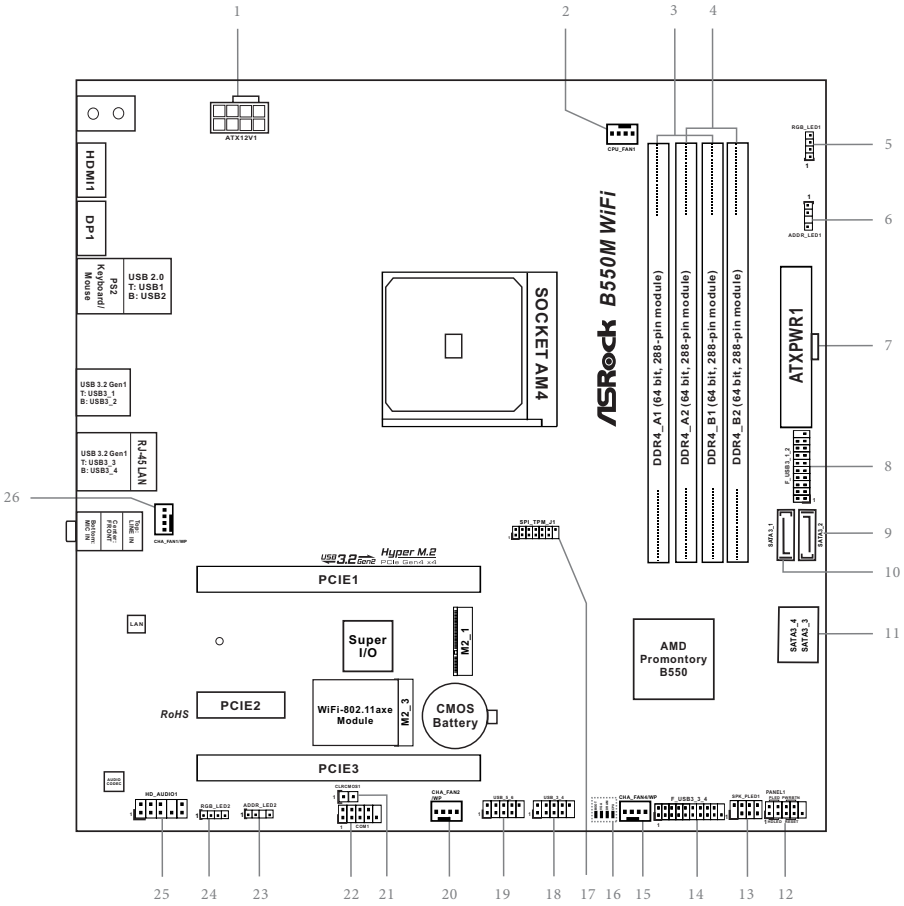

No.	Description
1	8 pin 12V Power Connector (ATX12V1)
2	CPU Fan Connector (CPU_FAN1)
3	2 x 288-pin DDR4 DIMM Slots (DDR4_A1, DDR4_B1)
4	2 x 288-pin DDR4 DIMM Slots (DDR4_A2, DDR4_B2)
5	RGB LED Header (RGB_LED1)
6	Addressable LED Header (ADDR_LED1)
7	ATX Power Connector (ATXPWR1)
8	USB 3.2 Gen1 Header (F_USB3_1_2)
9	SATA3 Connector (SATA3_2)
10	SATA3 Connector (SATA3_1)
11	SATA3 Connector (SATA3_4)(Upper), SATA3 Connector (SATA3_3)(Lower)
12	System Panel Header (PANEL1)
13	Power LED and Speaker Header (SPK_PLED1)
14	USB 3.2 Gen1 Header (F_USB3_3_4)
15	Chassis/Water Pump Fan Connector (CHA_FAN4/WP)
16	Post Status Checker (PSC)
17	SPI TPM Header (SPI_TPM_J1)
18	USB 2.0 Header (USB_3_4)
19	USB 2.0 Header (USB_5_6)
20	Chassis/Water Pump Fan Connector (CHA_FAN2/WP)
21	Clear CMOS Jumper (CLRCMOS1)
22	COM Port Header (COM1)
23	Addressable LED Header (ADDR_LED2)
24	RGB LED Header (RGB_LED2)
25	Front Panel Audio Header (HD_AUDIO1)
26	Chassis/Water Pump Fan Connector (CHA_FAN1/WP)

1.4 I/O Panel

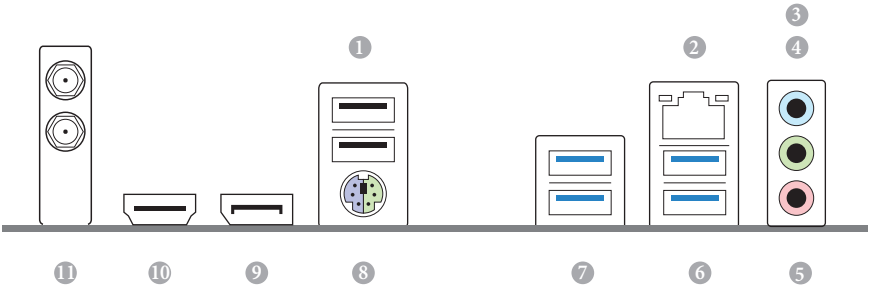

No.	Description	No.	Description
1	USB 2.0 Ports (USB_12)*	7	USB 3.2 Gen1 Ports (USB3_12)
2	LAN RJ-45 Port**	8	PS/2 Mouse/Keyboard Port
3	Line In (Light Blue)***	9	DisplayPort 1.4
4	Front Speaker (Lime)***	10	HDMI Port
5	Microphone (Pink)***	11	Antenna Ports
6	USB 3.2 Gen1 Ports (USB3_34)		

** Please note that the USB_2 consumes auxiliary power (+5VSB) while the other USB ports consume DUAL Power (+5VDUAL). The USB_2 is optimal for connecting the USB Type speaker and headset.*

*** There are two LEDs on each LAN port. Please refer to the table below for the LAN port LED indications.*

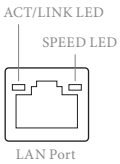

Activity / Link LED		Speed LED	
Status	**Description**	**Status**	**Description**
Off	No Link	Off	10Mbps connection
Blinking	Data Activity	Orange	100Mbps connection
On	Link	Green	1Gbps connection

*** ***Function of the Audio Ports in 7.1-channel Configuration***:

Port	Function
Light Blue (Rear panel)	Rear Speaker Out
Lime (Rear panel)	Front Speaker Out
Pink (Rear panel)	Central /Subwoofer Speaker Out
Lime (Front panel)	Side Speaker Out

1.5 Block Diagram

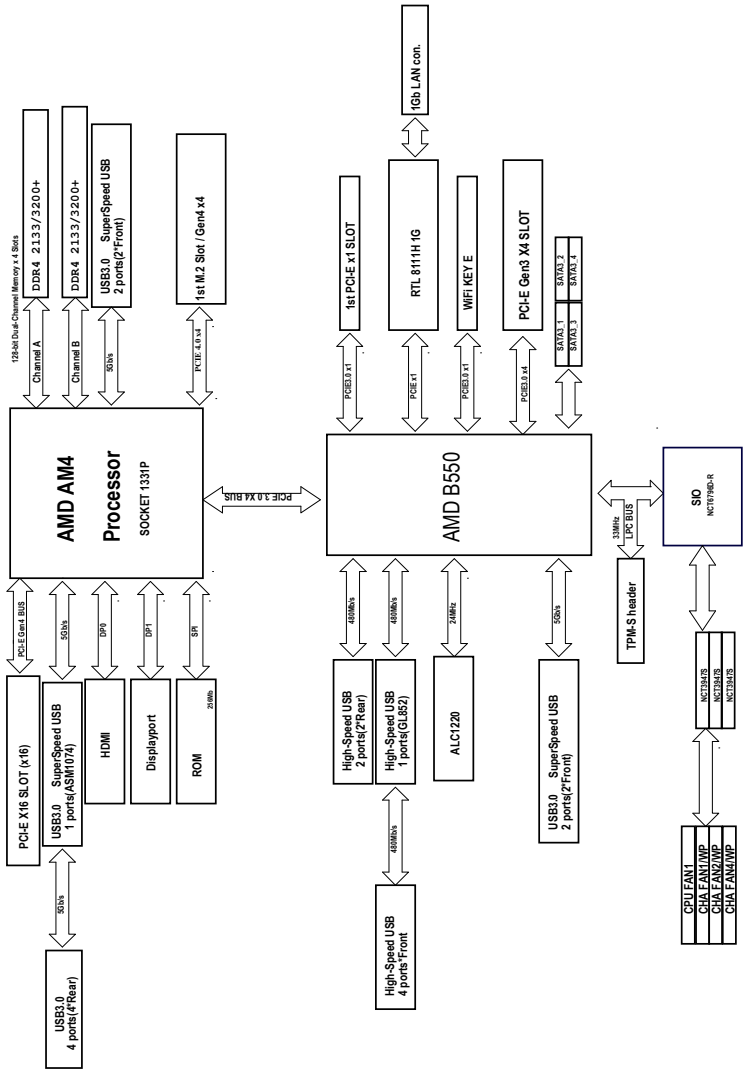

1.6 802.11axe Wi-Fi 6E Module and ASRock WiFi 2.4/5/6 GHz Antennas

802.11axe Wi-Fi 6E + BT Module

This motherboard comes with an exclusive 802.11 a/b/g/n/ac/ax/axe Wi-Fi 6E + BT v5.2 module that offers support for 802.11 a/b/g/n/ac/ax/axe Wi-Fi 6E connectivity standards and Bluetooth v5.2. Wi-Fi 6E + BT module is an easy-to-use wireless local area network (WLAN) adapter to support Wi-Fi 6E + BT. Bluetooth v5.2 standard features Smart Ready technology that adds a whole new class of functionality into the mobile devices. BT 5.2 also includes Low Energy Technology and ensures extraordinary low power consumption for PCs.

* The transmission speed may vary according to the environment.
* Wi-Fi 6E (6GHz band) will be supported by Microsoft® Windows® 11. The availability will depend on the different regulation status of each country and region. It will be activated (for supported countries) through Windows Update and software updates once available.
* A 6GHz compatible router is required for 6E functionality.

WiFi Antennas Installation Guide

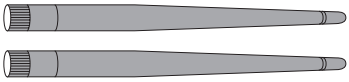

Step 1

Prepare the WiFi 2.4/5/6 GHz Antennas that come with the package.

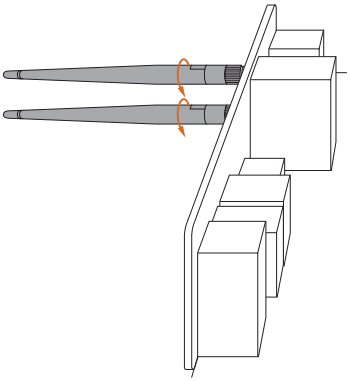

Step 2

Connect the two WiFi 2.4/5/6 GHz Antennas to the antenna connectors. Turn the antenna clockwise until it is securely connected.

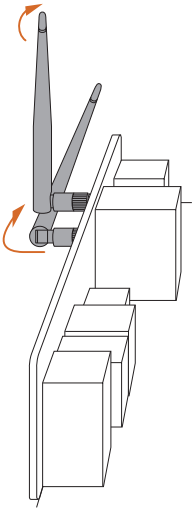

Step 3

Set the WiFi 2.4/5/6 GHz Antenna as shown in the illustration.

*You may need to adjust the direction of the antenna for a stronger signal.

Chapter 2 Installation

This is a Micro ATX form factor motherboard. Before you install the motherboard, study the configuration of your chassis to ensure that the motherboard fits into it.

Pre-installation Precautions

Take note of the following precautions before you install motherboard components or change any motherboard settings.

- Make sure to unplug the power cord before installing or removing the motherboard. Failure to do so may cause physical injuries to you and damages to motherboard components.
- In order to avoid damage from static electricity to the motherboard's components, NEVER place your motherboard directly on a carpet. Also remember to use a grounded wrist strap or touch a safety grounded object before you handle the components.
- Hold components by the edges and do not touch the ICs.
- Whenever you uninstall any components, place them on a grounded anti-static pad or in the bag that comes with the components.
- When placing screws to secure the motherboard to the chassis, please do not over-tighten the screws! Doing so may damage the motherboard.

2.1 Installing the CPU

Unplug all power cables before installing the CPU.

1

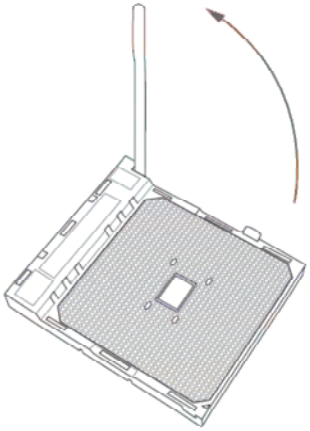

2

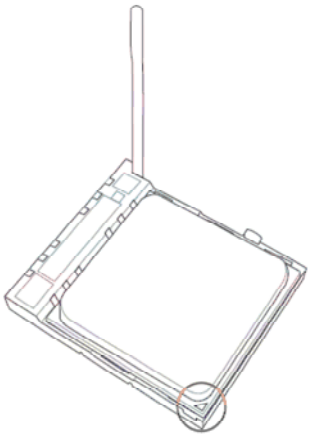

3

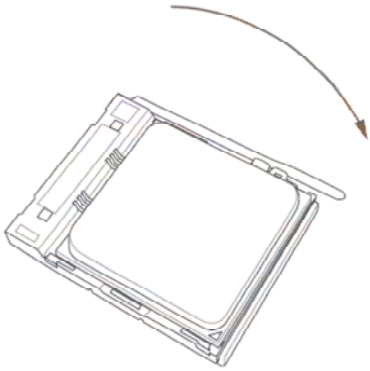

2.2 Installing the CPU Fan and Heatsink

After you install the CPU into this motherboard, it is necessary to install a larger heatsink and cooling fan to dissipate heat. You also need to spray thermal grease between the CPU and the heatsink to improve heat dissipation. Make sure that the CPU and the heatsink are securely fastened and in good contact with each other.

Please turn off the power or remove the power cord before changing a CPU or heatsink.

Installing the CPU Box Cooler SR1

1

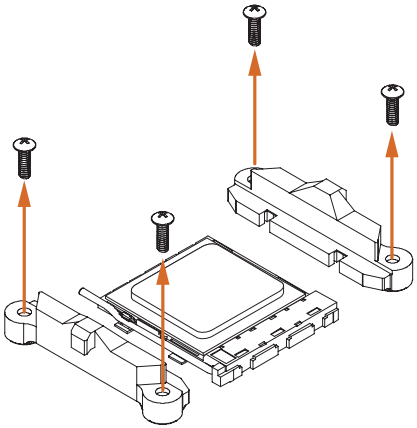

2

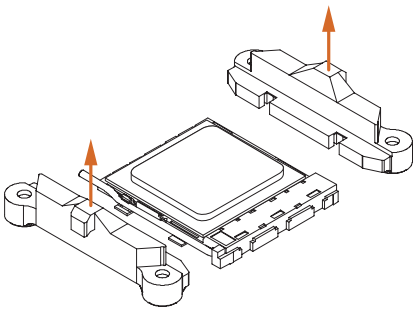

3

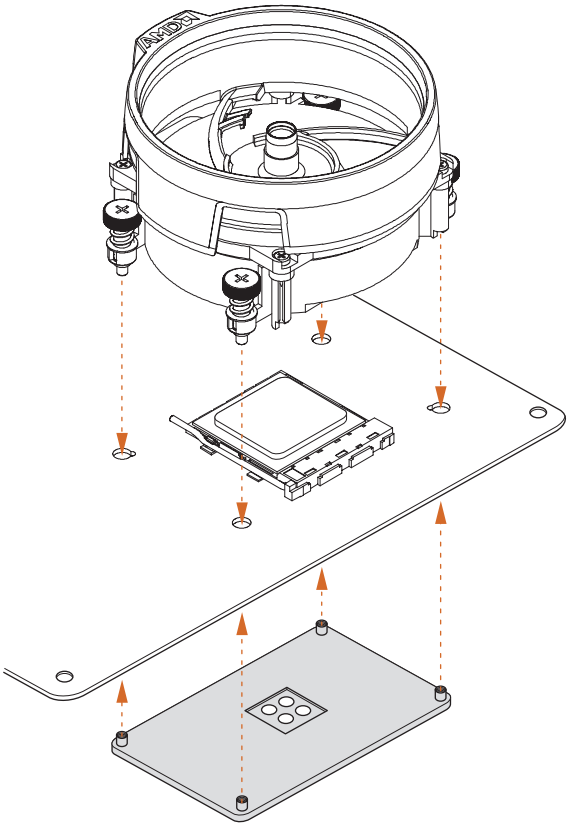

4

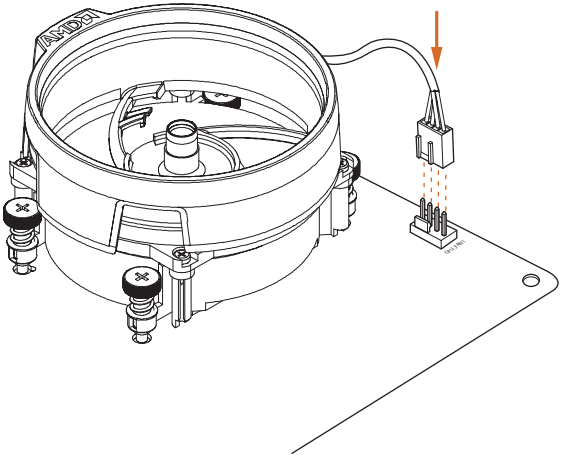

Installing the AM4 Box Cooler SR2

1

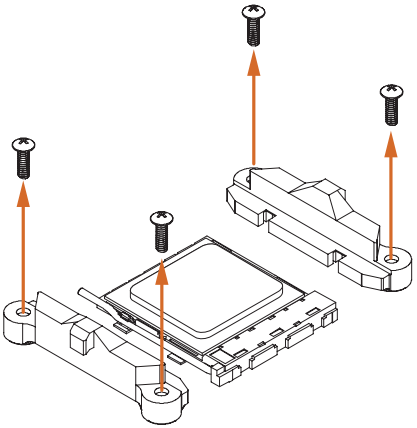

2

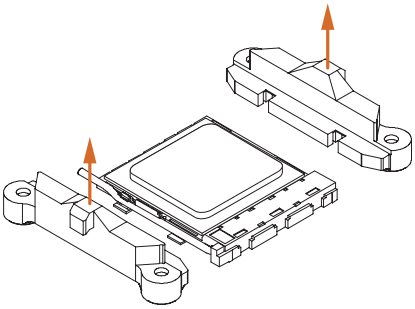

3

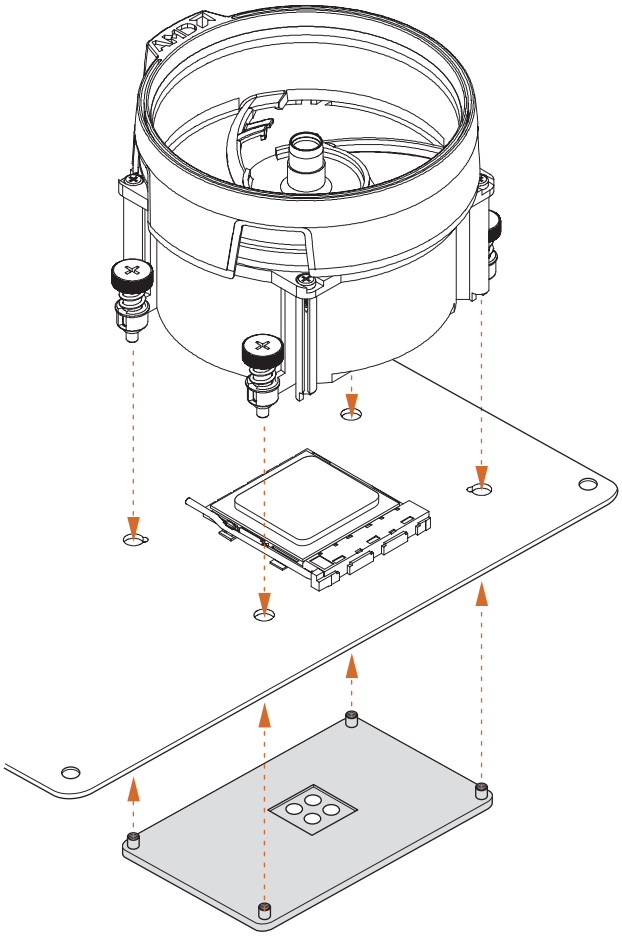

4

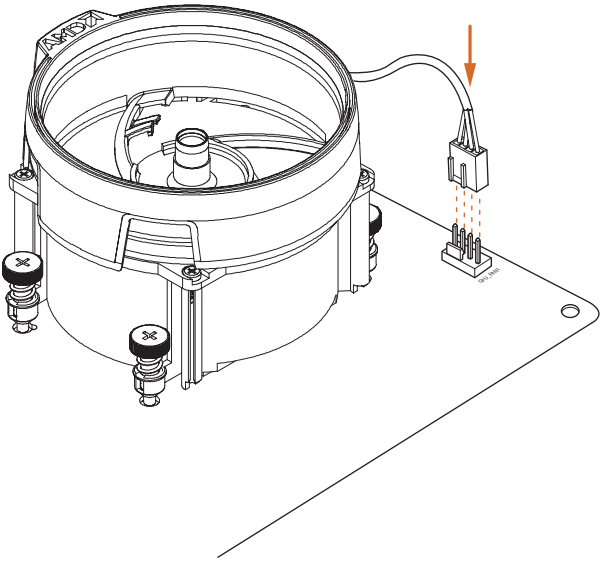

*The diagrams shown here are for reference only. The headers might be in a different position on your motherboard.

Installing the AM4 Box Cooler SR3

1

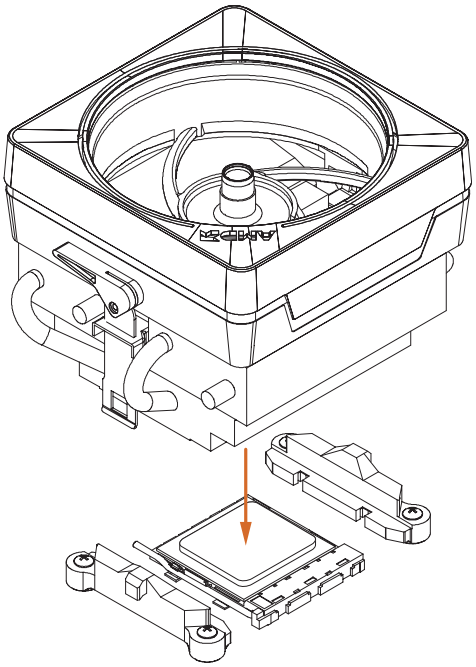

2

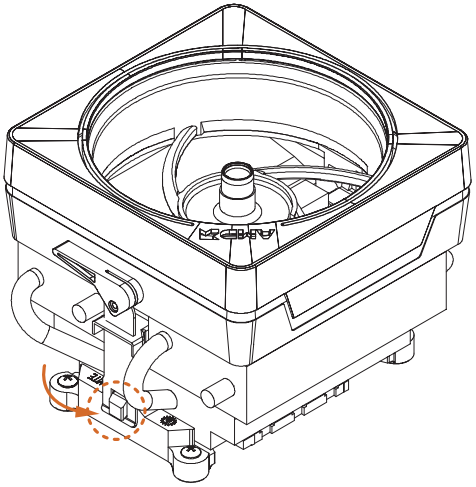

3

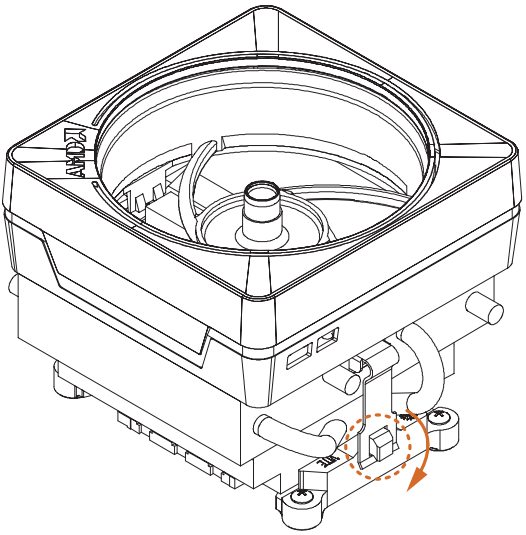

4

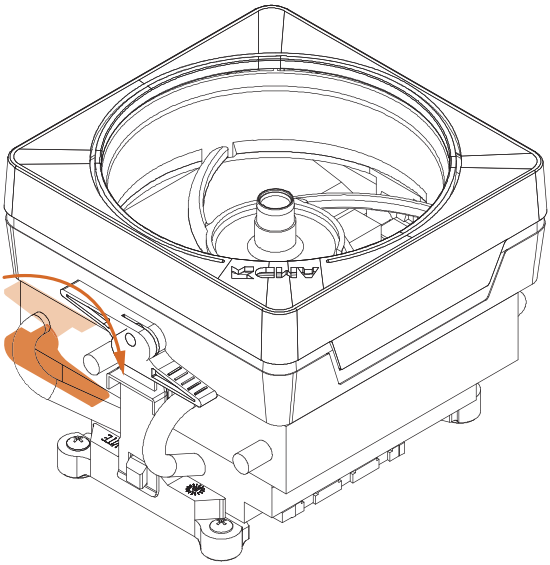

5

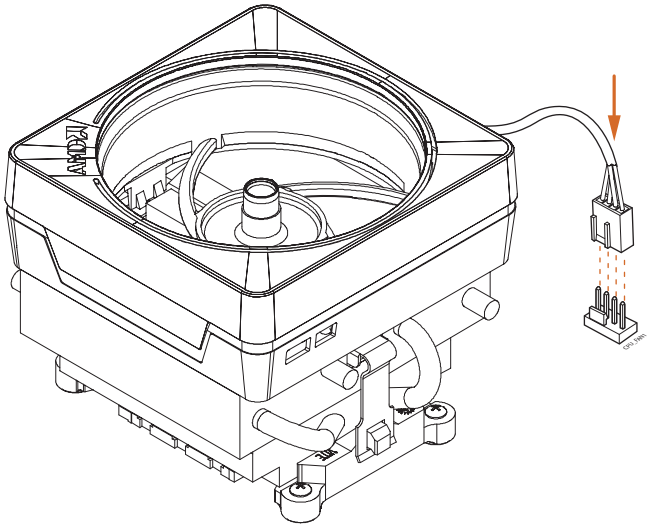

6

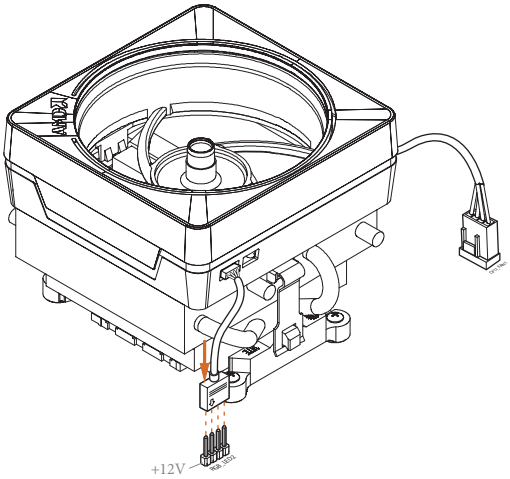

*The diagrams shown here are for reference only. The headers might be in a different position on your motherboard.

2.3 Installing Memory Modules (DIMM)

This motherboard provides four 288-pin DDR4 (Double Data Rate 4) DIMM slots, and supports Dual Channel Memory Technology.

1. *For dual channel configuration, you always need to install identical (the same brand, speed, size and chip-type) DDR4 DIMM pairs.*
2. *It is unable to activate Dual Channel Memory Technology with only one or three memory module installed.*
3. *It is not allowed to install a DDR, DDR2 or DDR3 memory module into a DDR4 slot; otherwise, this motherboard and DIMM may be damaged.*
4. *We suggest that you install the memory modules on DDR4_A2 and DDR4_B2 first for better DRAM compatibility on 2 DIMMs configuration.*

AMD non-XMP Memory Frequency Support

Ryzen Series CPUs (Vermeer and Matisse):

UDIMM Memory Slot				Frequency (Mhz)
A1	A2	B1	B2	
-	SR	-	-	3200
-	DR	-	-	3200
-	SR	-	SR	3200
-	DR	-	DR	3200
SR	SR	SR	SR	2933
SR/DR	DR	SR/DR	DR	2667
SR/DR	SR/DR	SR/DR	SR/DR	2667

Ryzen Series APUs (Cezanne and Renoir):

UDIMM Memory Slot				Frequency (Mhz)
A1	A2	B1	B2	
-	SR	-	-	3200
-	DR	-	-	3200
-	SR	-	SR	3200
-	DR	-	DR	3200
SR	SR	SR	SR	2933
SR/DR	DR	SR/DR	DR	2667
SR/DR	SR/DR	SR/DR	SR/DR	2667

Ryzen Series APUs (Picasso):

UDIMM Memory Slot				Frequency (Mhz)
A1	A2	B1	B2	
-	SR	-	-	2933
-	DR	-	-	2667
-	SR	-	SR	2667
-	DR	-	DR	2400
SR	SR	SR	SR	2133
SR/DR	DR	SR/DR	DR	1866
SR/DR	SR/DR	SR/DR	SR/DR	1866

SR: Single rank DIMM, 1Rx4 or 1Rx8 on DIMM module label
DR: Dual rank DIMM, 2Rx4 or 2Rx8 on DIMM module label

The DIMM only fits in one correct orientation. It will cause permanent damage to the motherboard and the DIMM if you force the DIMM into the slot at incorrect orientation.

1

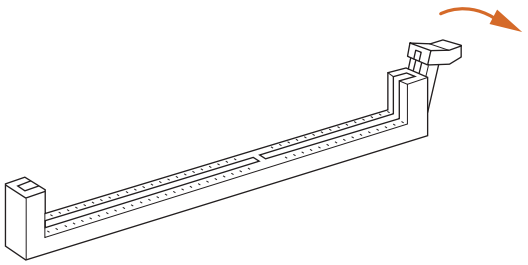

2

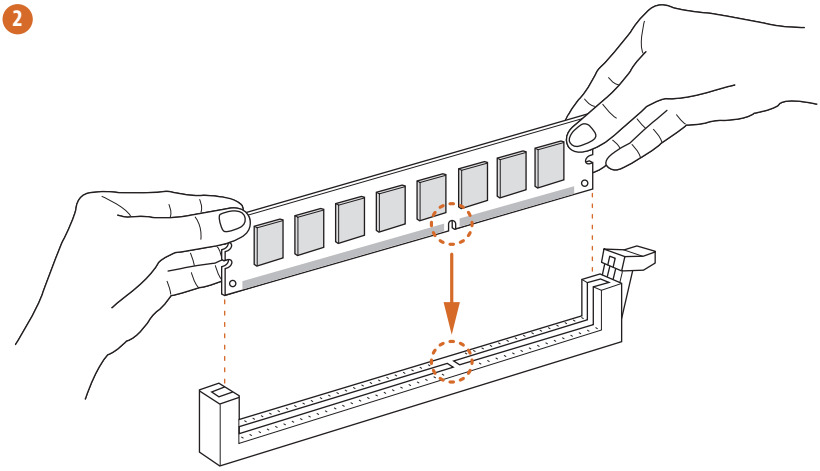

3

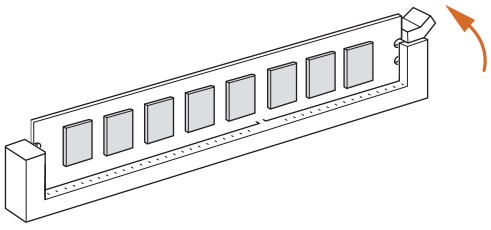

2.4 Connecting the Front Panel Header

1

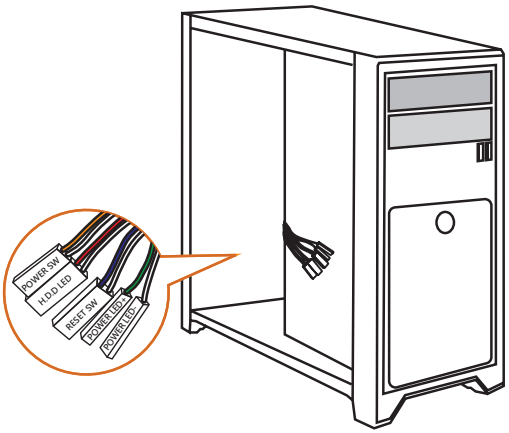

2

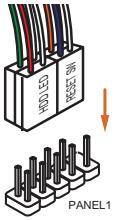

System Panel Header

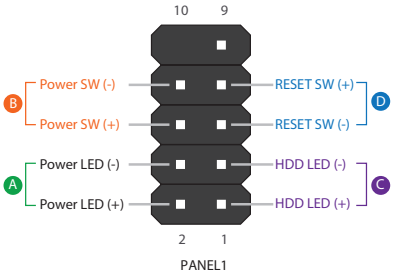

Front Panel Wires

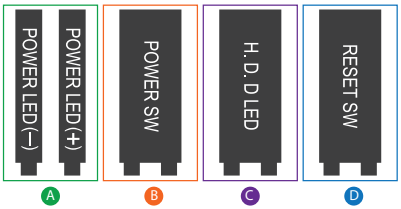

English

2.5 Installing the I/O Panel Shield

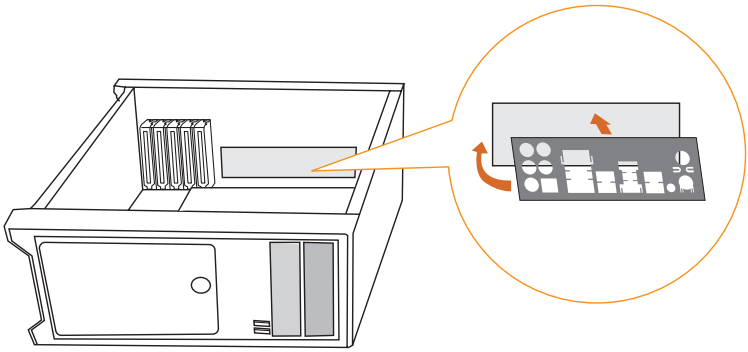

2.6 Installing the Motherboard

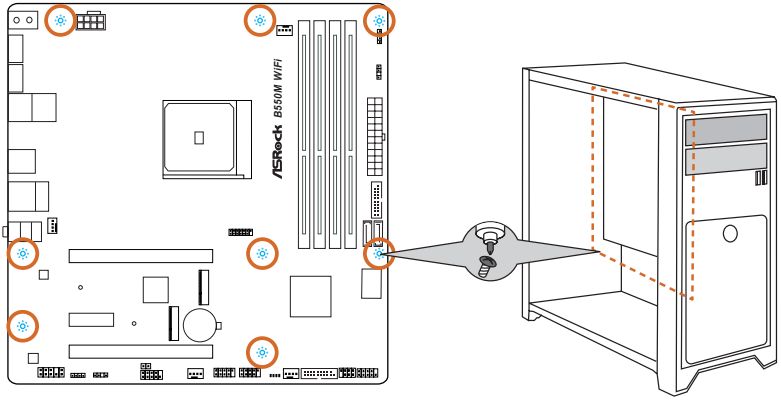

2.7 Installing SATA Drives

1

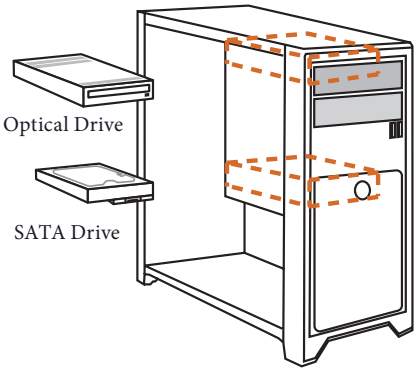

2

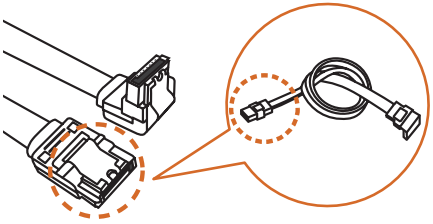

3

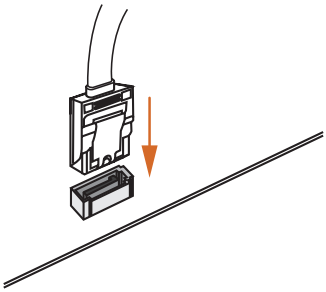

4

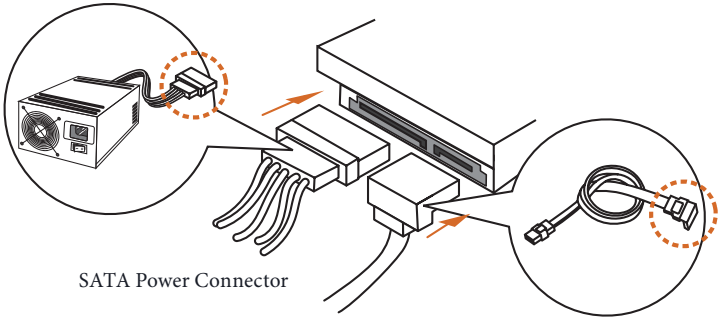

2.8 Installing a Graphics Card

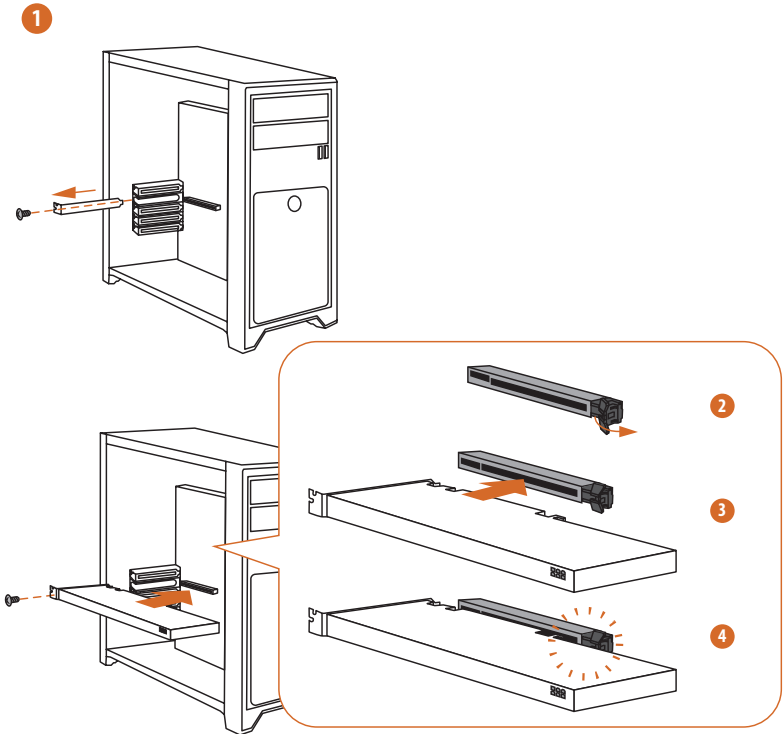

Expansion Slots (PCIe Slots)

There are 3 PCIe slots on the motherboard.

Before installing an expansion card, please make sure that the power supply is switched off or the power cord is unplugged. Please read the documentation of the expansion card and make necessary hardware settings for the card before you start the installation.

PCIe slots:

PCIE1 (PCIe 4.0 x16 slot) is used for PCIe x16 lane width graphics cards.
PCIE2 (PCIe 3.0 x1 slot) is used for PCIe x1 lane width cards.
PCIE3 (PCIe 3.0 x16 slot) is used for PCIe x4 lane width graphics cards.

PCIe Slot Configurations

	PCIE1	PCIE2	PCIE3
Ryzen Series CPUs (Vermeer and Matisse)	Gen4x16	Gen3x1	Gen3x4
Ryzen Series APUs (Cezanne and Renoir)	Gen3x16	Gen3x1	Gen3x4
Ryzen Series APUs (Picasso)	Gen3x8	Gen3x1	Gen3x4

For a better thermal environment, please connect a chassis fan to the motherboard's chassis fan connector (CHA_FAN1/WP, CHA_FAN2/WP or CHA_FAN4/WP) when using multiple graphics cards.

2.9 Connecting Peripheral Devices

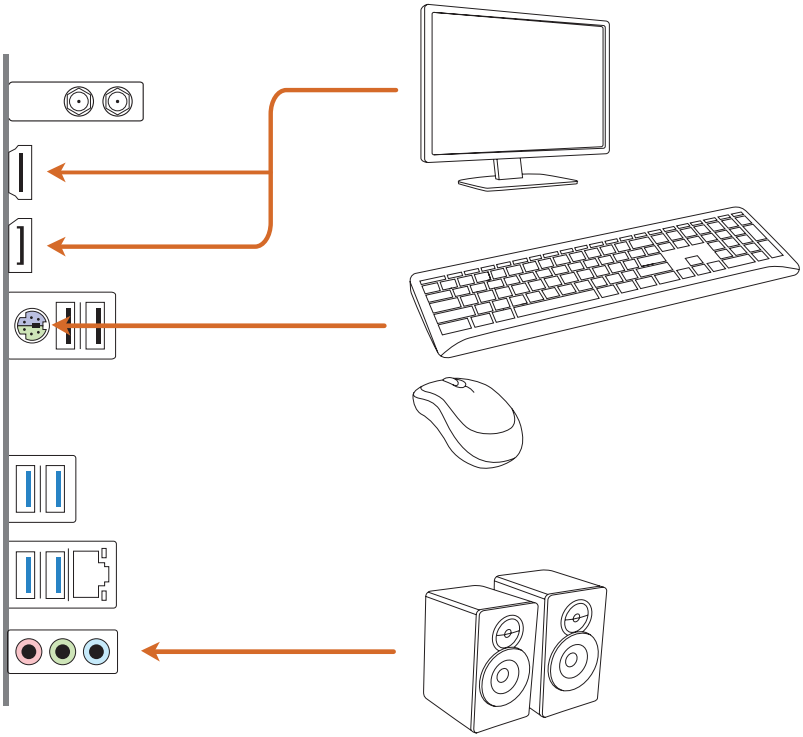

2.10 Connecting the Power Connectors

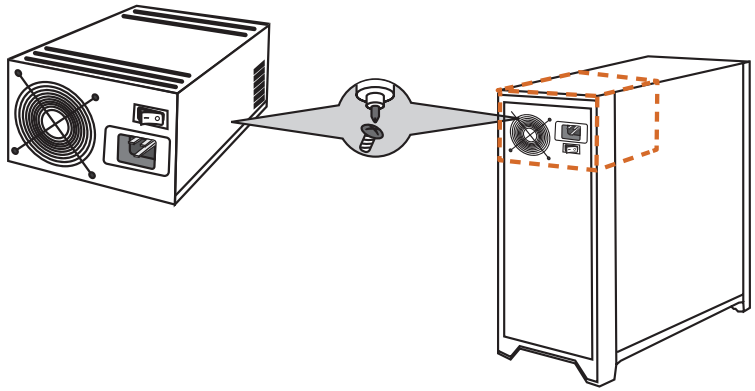

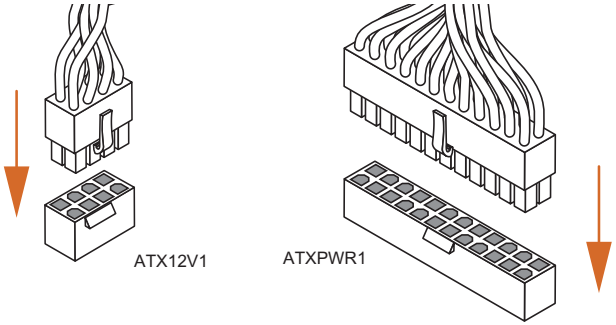

2.11 Power On

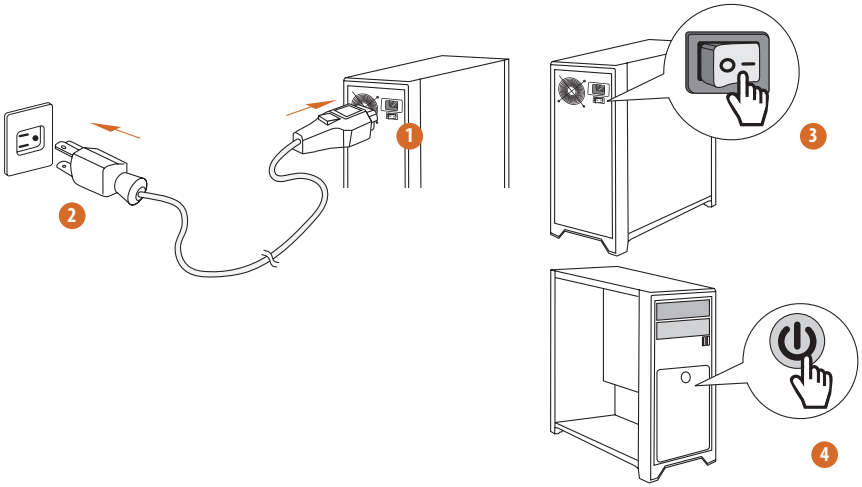

2.12 Jumpers Setup

The illustration shows how jumpers are setup. When the jumper cap is placed on the pins, the jumper is “Short”. If no jumper cap is placed on the pins, the jumper is “Open”.

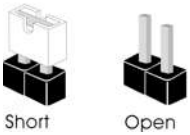

Clear CMOS Jumper
(CLRCMOS1) (see p.7, No. 21)

CLRCMOS1 allows you to clear the data in CMOS. The data in CMOS includes system setup information such as system password, date, time, and system setup parameters. To clear and reset the system parameters to default setup, please turn off the computer and unplug the power cord, then use a jumper cap to short the pins on CLRCMOS1 for 3 seconds. Please remember to remove the jumper cap after clearing the CMOS. If you need to clear the CMOS when you just finish updating the BIOS, you must boot up the system first, and then shut it down before you do the clear-CMOS action.

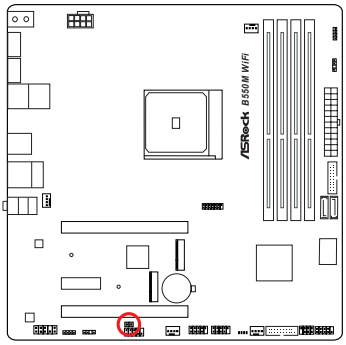

CLRCMOS1



2-pin Jumper

Short: Clear CMOS
Open: Default

English

2.13 Onboard Headers and Connectors

Onboard headers and connectors are NOT jumpers. Do NOT place jumper caps over these headers and connectors. Placing jumper caps over the headers and connectors will cause permanent damage to the motherboard.

System Panel Header
(9-pin PANEL1) (see p.7, No. 12)

Connect the power button, reset button and system status indicator on the chassis to this header according to the pin assignments below. Note the positive and negative pins before connecting the cables.

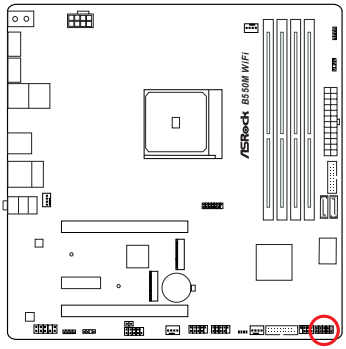

PANEL1

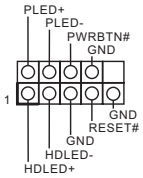

PWRBTN (Power Button):
Connect to the power button on the chassis front panel. You may configure the way to turn off your system using the power button.

RESET (Reset Button):
Connect to the reset button on the chassis front panel. Press the reset button to restart the computer if the computer freezes and fails to perform a normal restart.

PLED (System Power LED):
Connect to the power status indicator on the chassis front panel. The LED is on when the system is operating. The LED keeps blinking when the system is in S1/S3 sleep state. The LED is off when the system is in S4 sleep state or powered off (S5).

HDLED (Hard Drive Activity LED):
Connect to the hard drive activity LED on the chassis front panel. The LED is on when the hard drive is reading or writing data.

The front panel design may differ by chassis. A front panel module mainly consists of power button, reset button, power LED, hard drive activity LED, speaker and etc. When connecting your chassis front panel module to this header, make sure the wire assignments and the pin assignments are matched correctly.

Power LED and Speaker Header
(7-pin SPK_PLED1) (see p.7, No. 13)

Please connect the chassis power LED and the chassis speaker to this header.

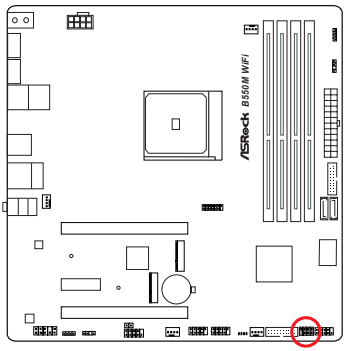

SPK_PLED1

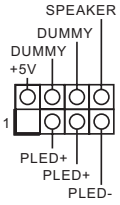

Serial ATA3 Connectors

Vertical:

(SATA3_1) (see p.7, No. 10)

(SATA3_2) (see p.7, No. 9)

Right Angle:

(SATA3_3) (see p.7, No. 11)(Lower)

(SATA3_4) (see p.7, No. 11)(Upper)

These four SATA3 connectors support SATA data cables for internal storage devices with up to 6.0 Gb/s data transfer rate.

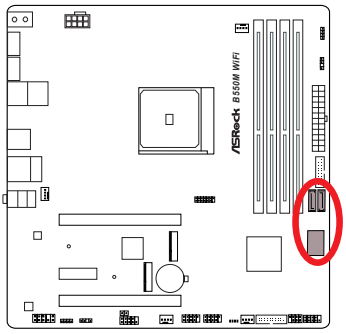

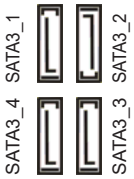

USB 2.0 Headers
(9-pin USB_3_4) (see p.7, No. 18)
(9-pin USB_5_6) (see p.7, No. 19)

There are two headers on this motherboard. Each USB 2.0 header can support two ports.

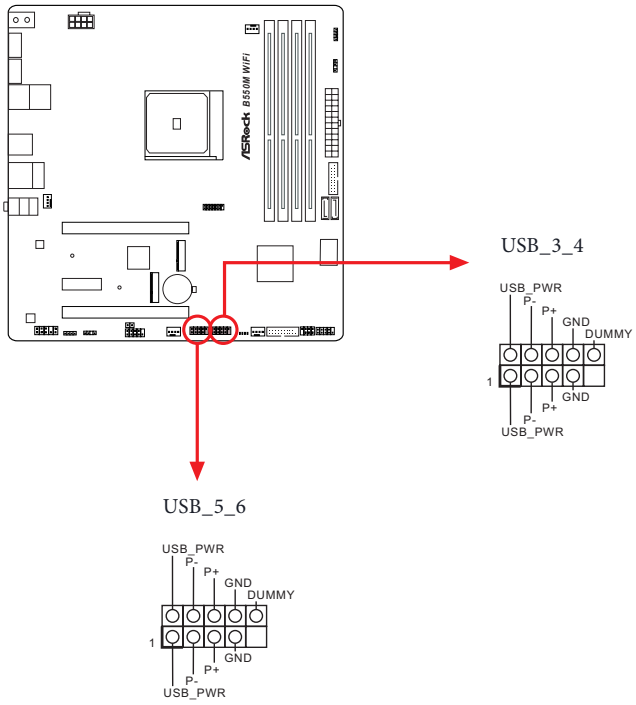

USB 3.2 Gen1 Headers
(19-pin F_USB3_1_2) (see p.7, No. 8)
(19-pin F_USB3_3_4) (see p.7, No. 14)

There are two headers on this motherboard. Each USB 3.2 Gen1 header can support two ports.

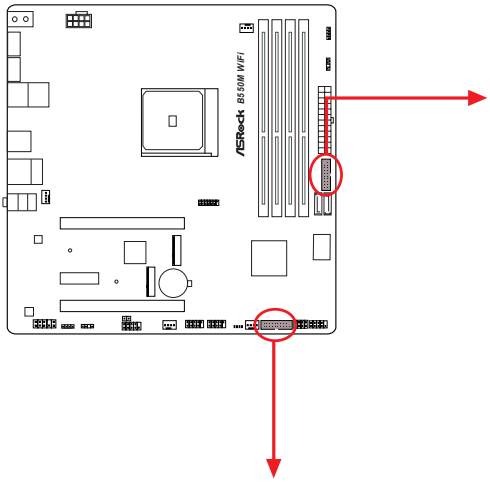

F_USB3_1_2

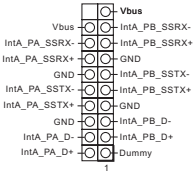

F_USB3_3_4

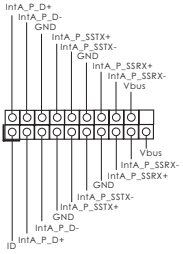

English

Front Panel Audio Header

(9-pin HD_AUDIO1) (see p.7, No. 25)

This header is for connecting audio devices to the front audio panel.

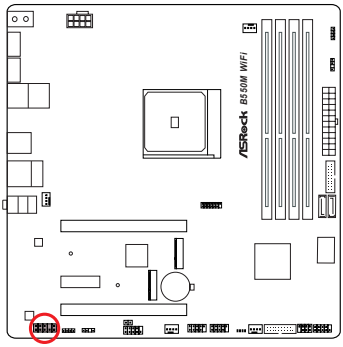

HD_AUDIO1

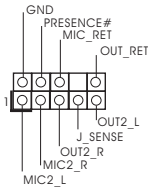

High Definition Audio supports Jack Sensing, but the panel wire on the chassis must support HDA to function correctly. Please follow the instructions in our manual and chassis manual to install your system.

English

Chassis Water Pump Fan Connectors
(4-pin CHA_FAN1/WP) (see p.7, No. 26)
(4-pin CHA_FAN2/WP) (see p.7, No. 20)
(4-pin CHA_FAN4/WP) (see p.7, No. 15)

This header allows you to connect Case or Radiator fan. If you plan to connect a 3-pin fan, please connect it to Pin 1-3.

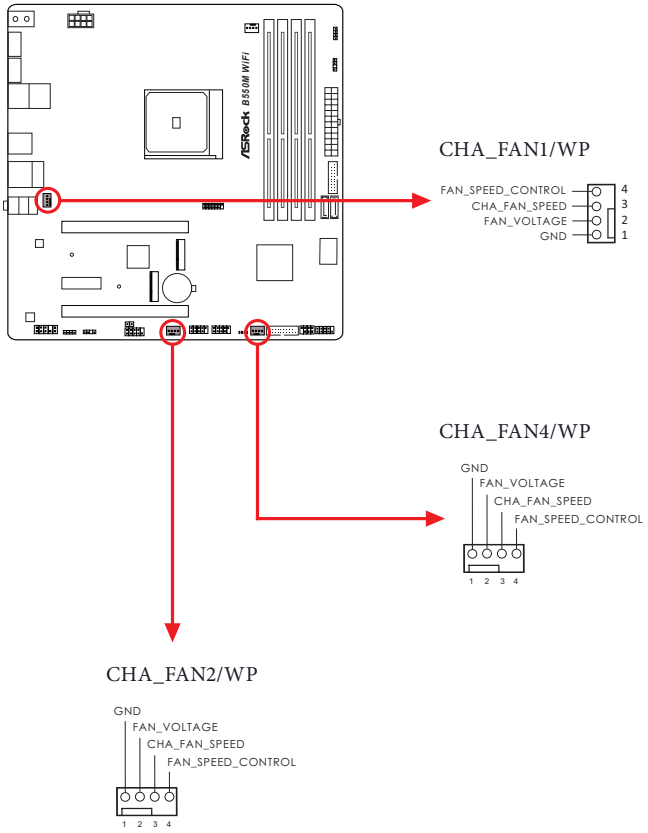

CPU Fan Connector
(4-pin CPU_FAN1) (see p.7, No. 2)

This header allows you to connect CPU fan. If you plan to connect a 3-pin fan, please connect it to Pin 1-3.

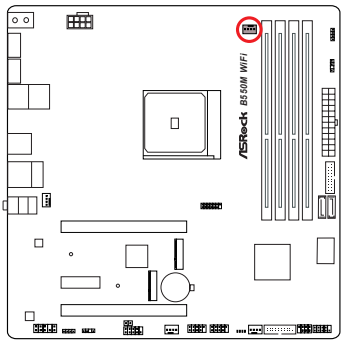

CPU_FAN1

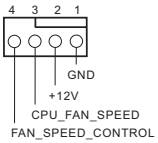

ATX Power Connector
(24-pin ATXPWR1) (see p.7, No. 7)

This motherboard provides a 24-pin ATX power connector. To use a 20-pin ATX power supply, please plug it along Pin 1 and Pin 13.

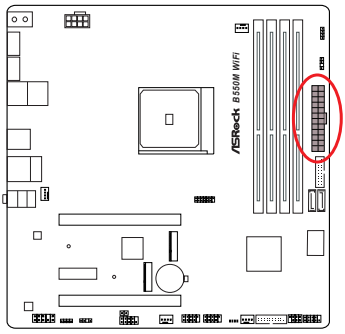

ATXPWR1

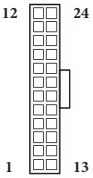

English

ATX 12V Power Connector
(8-pin ATX12V1) (see p.7, No. 1)

This motherboard provides an 8-pin ATX 12V power connector. To use a 4-pin ATX power supply, please plug it along Pin 1 and Pin 5.

***Warning: Please make sure that the power cable connected is for the CPU and not the graphics card. Do not plug the PCIe power cable to this connector.**

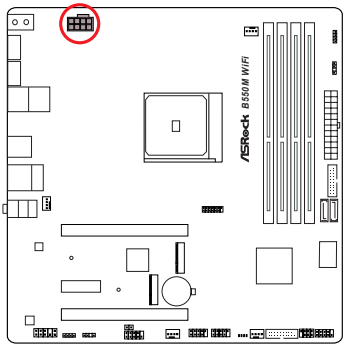

ATX12V1

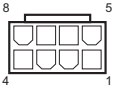

Serial Port Header

(9-pin COM1) (see p.7, No. 22)

This COM1 header supports a serial port module.

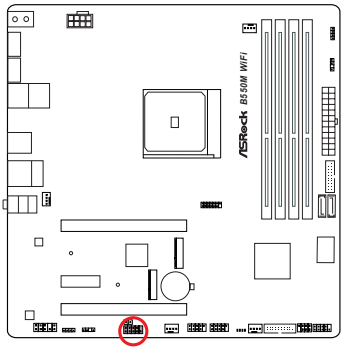

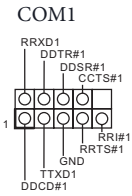

SPI TPM Header

(13-pin SPI_TPM_J1) (see p.7, No. 17)

This connector supports SPI Trusted Platform Module (TPM) system, which can securely store keys, digital certificates, passwords, and data. A TPM system also helps enhance network security, protects digital identities, and ensures platform integrity.

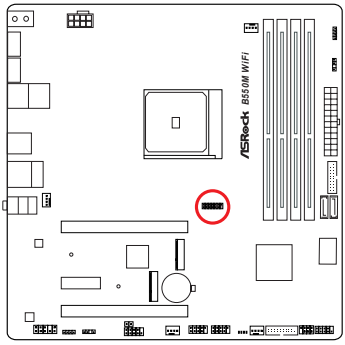

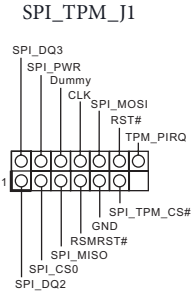

English

RGB LED Headers
(4-pin RGB_LED1) (see p.7, No. 5)
(4-pin RGB_LED2) (see p.7, No. 24)
These two RGB headers are used to connect RGB LED extension cable which allows users to choose from various LED lighting effects.
Caution: Never install the RGB LED cable in the wrong orientation; otherwise, the cable may be damaged.

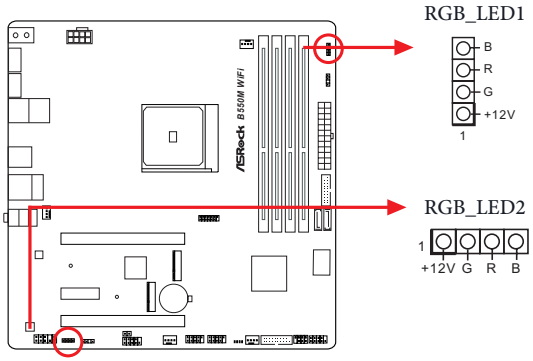

Connect your RGB LED strips to the **RGB LED Headers (RGB_LED1 / RGB_LED2)** on the motherboard.

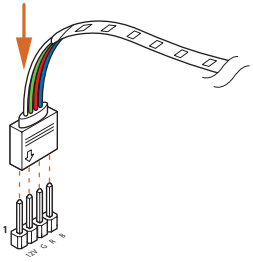

1. *Never install the RGB LED cable in the wrong orientation; otherwise, the cable may be damaged.*
2. *Before installing or removing your RGB LED cable, please power off your system and unplug the power cord from the power supply. Failure to do so may cause damages to motherboard components.*

1. *Please note that the RGB LED strips do not come with the package.*
2. *The RGB LED header supports standard 5050 RGB LED strip (12V/G/R/B), with a maximum power rating of 3A (12V) and length within 2 meters.*

Addressable LED Headers

(3-pin ADDR_LED1) (see p.7, No. 6)

(3-pin ADDR_LED2) (see p.7, No. 23)

These headers are used to connect Addressable LED extension cables which allow users to choose from various LED lighting effects.

Caution: Never install the Addressable LED cable in the wrong orientation; otherwise, the cable may be damaged.

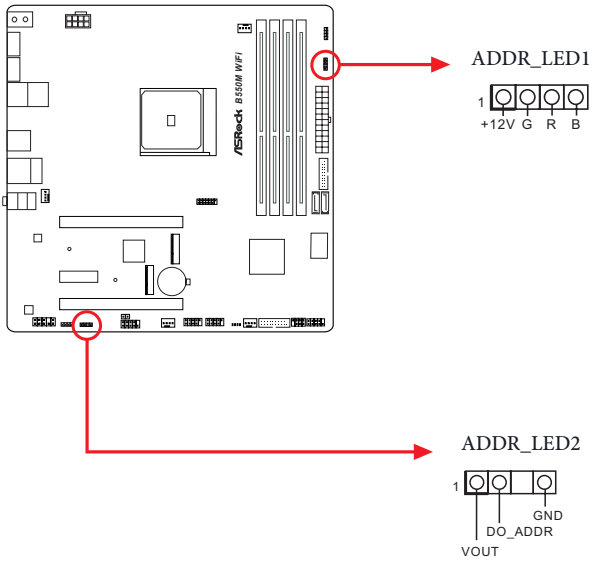

Connect your Addressable RGB LED strips to the **Addressable LED Headers (ADDR_LED1 / ADDR_LED2 / ADDR_LED3)** on the motherboard.

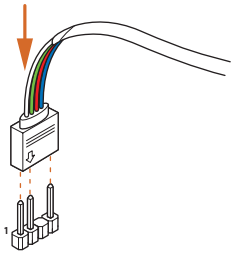

English

1. *Never install the Addressable LED cable in the wrong orientation; otherwise, the cable may be damaged.*
2. *Before installing or removing your Addressable LED cable, please power off your system and unplug the power cord from the power supply. Failure to do so may cause damages to motherboard components.*

1. *Please note that the Addressable LED strips do not come with the package.*
2. *The Addressable LED header supports WS2812B addressable RGB LED strip (5V/ Data/GND), with a maximum power rating of 3A (5V) and length within 2 meters.*

2.14 Post Status Checker

Post Status Checker (PSC) diagnoses the computer when users power on the machine. It emits a red light to indicate whether the CPU, memory, VGA or storage is dysfunctional. The lights go off if the four mentioned above are functioning normally.

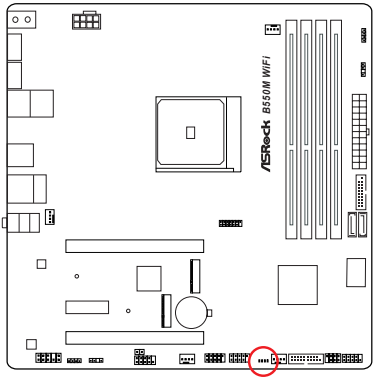



2.15 M.2 SSD Installation Guide (M2_1)

The M.2 is a small size and versatile card edge connector that aims to replace mPCIe and mSATA. The Hyper M.2 Socket (M2_1, Key M) supports type 2280 PCIe Gen4x4 (64 Gb/s) mode.

* M2_1 will run at Gen4x4 with Vermeer, Matisse and Gen3x4 with Cezanne, Renoir and Picasso.

Installing the M.2 SSD

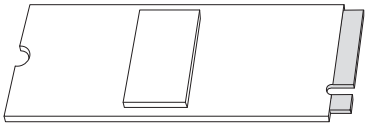

Step 1

Prepare a M.2 SSD.

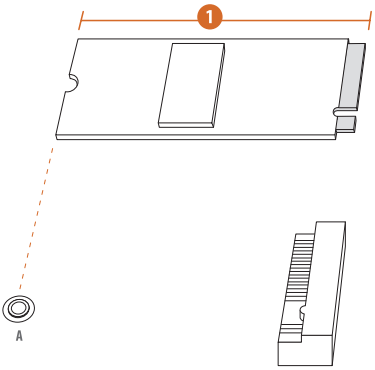

Step 2

Depending on the PCB type and length of your M.2 SSD, find the corresponding nut location to be used.

No.	1
Nut Location	A
PCB Length	8cm
Module Type	Type2280

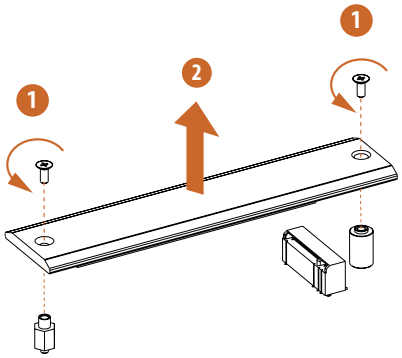

Step 3

Before installing a M.2 SSD, please loosen the screws to remove the M.2 heatsink.
*Please remove the protective films on the bottom side of the M.2 heatsink before you install a M.2 SSD.

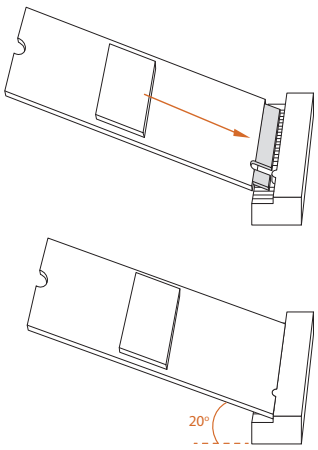

Step 4

Align and gently insert the M.2 SSD into the M.2 slot. Please be aware that the M.2 SSD only fits in one orientation.

Step 5

Before securing the M.2 heatsink, make sure to align the notch on the SSD to the standoff on the motherboard; otherwise, the SSD module may be damaged.

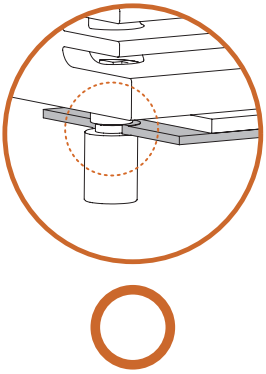

Correct Installation:
The SSD's PCB is in proper place, and the M.2 heatsink can be screwed in.

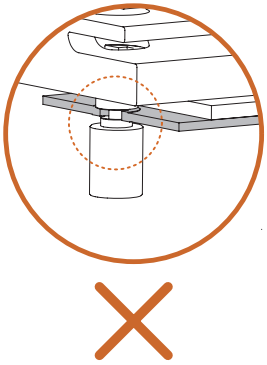

Incorrect Installation:
The SSD's PCB sits between M.2 heatsink and standoff. Do not continue.

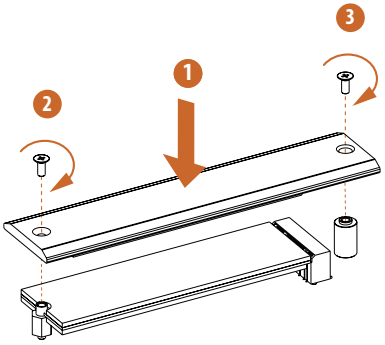

Step 6

Tighten the screws with a screwdriver to secure the module and M.2 heatsink into place in the order shown. Tighten screw opposite the M.2 connector first (2), and then tighten the one next to the M.2 connector (3).
*Please do not overtighten the screw as this might damage the module and M.2 heatsink.

For the latest updates of M.2 SSD support list, please visit our website for details: http://www.asrock.com

Version 1.0
Published October 2024

Copyright©2024 ASRock INC. All rights reserved.

Copyright Notice:

No part of this documentation may be reproduced, transcribed, transmitted, or translated in any language, in any form or by any means, except duplication of documentation by the purchaser for backup purpose, without written consent of ASRock Inc.

Products and corporate names appearing in this documentation may or may not be registered trademarks or copyrights of their respective companies, and are used only for identification or explanation and to the owners' benefit, without intent to infringe.

Disclaimer:

Specifications and information contained in this documentation are furnished for informational use only and subject to change without notice, and should not be constructed as a commitment by ASRock. ASRock assumes no responsibility for any errors or omissions that may appear in this documentation.

To the extent permitted by law, with respect to the contents of this documentation, ASRock does not provide warranty of any kind, either expressed or implied, including but not limited to the implied warranties or conditions of merchantability or fitness for a particular purpose. In no event shall ASRock, its directors, officers, employees, or agents be liable for any indirect, special, incidental, or consequential damages (including damages for loss of profits, loss of business, loss of data, interruption of business and the like), even if ASRock has been advised of the possibility of such damages arising from any defect or error in the documentation or product.

FCC Compliance Statement

This device complies with Part 15 of the FCC Rules. Operation is subject to the following two conditions:

(1) this device may not cause harmful interference, and

(2) this device must accept any interference received, including interference that may cause undesired operation.

This equipment has been tested and found to comply with the limits for a Class B digital device, pursuant to part 15 of the FCC Rules. These limits are designed to provide reasonable protection against harmful interference in a residential installation. This equipment generates, uses and can radiate radio frequency energy and, if not installed and used in accordance with the instructions, may cause harmful interference to radio communications. However, there is no guarantee that interference will not occur in a particular installation. If this equipment does cause harmful interference to radio or television reception, which can be determined by turning the equipment off and on, the user is encouraged to try to correct the interference by one or more of the following measures:

- Reorient or relocate the receiving antenna.
- Increase the separation between the equipment and receiver.
- Connect the equipment into an outlet on a circuit different from that to which the receiver is connected.
- Consult the dealer or an experienced radio/TV technician for help.

Button Battery Safety Notice

⚠WARNING

- **INGESTION HAZARD:** This product contains a button cell or coin battery.
- **DEATH** or serious injury can occur if ingested.
- A swallowed button cell or coin battery can cause **Internal Chemical Burns** in as little as **2 hours**.
- **KEEP** new and used batteries **OUT OF REACH of CHILDREN**
- **Seek immediate medical attention** if a battery is suspected to be swallowed or inserted inside any part of the body.



- Remove and immediately recycle or dispose of used batteries according to local regulations and keep away from children. Do NOT dispose of batteries in household trash or incinerate.
- Even used batteries may cause severe injury or death.
- Call a local poison control center for treatment information.
- Battery type: CR2032
- Battery voltage: 3V
- Non-rechargeable batteries are not to be recharged.
- Do not force discharge, recharge, disassemble, heat above (manufacturer's specified temperature rating) or incinerate. Doing so may result in injury due to venting, leakage or explosion resulting in chemical burns.
- This product contains an irreplaceable battery.
- This icon indicates that a swallowed button battery can cause serious injury or death. Please keep batteries out of sight or reach of children.

CALIFORNIA, USA ONLY

The Lithium battery adopted on this motherboard contains Perchlorate, a toxic substance controlled in Perchlorate Best Management Practices (BMP) regulations passed by the California Legislature. When you discard the Lithium battery in California, USA, please follow the related regulations in advance.

"Perchlorate Material-special handling may apply, see www.dtsc.ca.gov/hazardouswaste/perchlorate"

CALIFORNIA, USA ONLY



WARNING: Cancer and Reproductive Harm
www.P65Warnings.ca.gov

CE Conformity

CE

ASRock INC. hereby declares that this device is in compliance with the essential requirements and other relevant provisions of related Directives. Full text of EU declaration of conformity is available at: http://www.asrock.com

ASRock follows the green design concept to design and manufacture our products, and makes sure that each stage of the product life cycle of ASRock product is in line with global environmental regulations. In addition, ASRock disclose the relevant information based on regulation requirements.

Please refer to https://www.asrock.com/general/about.asp?cat=Responsibility for information disclosure based on regulation requirements ASRock is complied with.

UKCA Conformity

UK
CA

ASRock INC. hereby declares that this device is in compliance with the essential requirements and other relevant provisions of related UKCA Directives. Full text of UKCA declaration of conformity is available at: http://www.asrock.com

Consumer Limited Warranty - Australia

Our goods come with guarantees that cannot be excluded under the Australian Consumer Law. You are entitled to a replacement or refund for a major failure and compensation for any other reasonably foreseeable loss or damage caused by our goods. You are also entitled to have the goods repaired or replaced if the goods fail to be of acceptable quality and the failure does not amount to a major failure. If you require assistance please call ASRock Tel : +886-2-28965588 ext.123 (Standard International call charges apply)



WARNING

THIS PRODUCT CONTAINS A BUTTOON BATTERY
If swallowed, a button battery can cause serious injury or death.
Please keep batteries out of sight or reach of children.

Proper Disposal



DO NOT throw the motherboard in municipal waste. This product has been designed to enable proper reuse of parts and recycling. This symbol of the crossed out wheeled bin indicates that the product (electrical and electronic equipment) should not be placed in municipal waste. Check local regulations for disposal of electronic products.

Class B ITE

この装置は、クラスB情報技術装置です。この装置は、家庭環境で使用することを目的としていますが、この装置がラジオやテレビジョン受信機に近接して使用されると、受信障害を引き起こすことがあります。取扱説明書に従って正しい取り扱いをして下さい。

Trademark Information

The terms HDMI® and HDMI High-Definition Multimedia Interface, and the HDMI logo are trademarks or registered trademarks of HDMI Licensing LLC in the United States and other countries.

HDMI®
HIGH-DEFINITION MULTIMEDIA INTERFACE

European Community Radio Equipment Directive Compliance Statement

This device complies with directive 2014/53/EU issued by the Commision of the European Community. This equipment complies with EU radiation exposure limits set forth for an uncontrolled environment.

This equipment should be installed and operated with minimum distance 20cm between the radiator & your body.

Operations in the 5.15-5.35/6GHz band are restricted to indoor usage only.

	AT	BE	BG	CH	CY	CZ	DE
	DK	EE	EL	ES	FI	FR	HR
	HU	IE	IS	IT	LI	LT	LU
	LV	MT	NL	NO	PL	PT	RO
	SE	SI	SK	TR			

CE

Radio Frequency Bands and Maximum Power Levels

- Features : Wi-Fi 6E, BT, Wi-Fi 7
- Frequency Range : 2.4 GHz: 2400-2485MHz; 5 GHz: 5150-5350MHz, 5470-5725MHz, 5725-5850MHz; 6 GHz: 5955-6415MHz
- Max Power Level : 2.4 GHz: 20dBm; 5 GHz: 23dBm; 6 GHz: 23dBm

Compliance Statement of Innovation, Science and Economic Development Canada (ISED)

This device complies with with Innovation, Science and Economic Development Canada's licence-exempt RSS(s). Operation is subject to the following two conditions: (1) this device may not cause interference, and (2) this device must accept any interference, including interference that may cause undesired operation of the device. Operation in the band 5150-5250 MHz is only for indoor use to reduce the potential for harmful interference to co-channel mobile satellite systems. CAN ICES-003(B)/NMB-003(B)

NCC 無線設備警告聲明

經型式認證合格之低功率射頻電機，非經許可，公司、商號或使用者均不得擅自變更頻率、加大功率或變更原設計之特性及功能。 低功率射頻電機之使用不得影響飛航安全及干擾合法通信；經發現有干擾現象時，應立即停用，並改善至無干擾時方得繼續使用。前項合法通信，指依電信法規定作業之無線電通信。低功率射頻電機須忍受合法通信或工業、科學及醫療用電波輻射性電機設備之干擾。

ASRock Incorporation

Contains Wi-Fi 6E module with Bluetooth

AMD® Wi-Fi 6E RZ616

Model: MT7922A22M

R-NZ

FCC ID : RAS-MT7922A22M

IC : 7542A-MT7922A22M

CE

R 020-220194

T D220055020

CCAI21Y10050T2

5.15~5.35/6GHz indoor use only

BSMI 限用物質及元素清單

單元	限用物質及其化學符號					
	鉛 (Pb)	鎘 (Cd)	汞 (Hg)	六價鉻 (Cr^{+6})	多溴聯苯 (PBB)	多溴聯苯醚 (PBDE)
電路板	O	O	O	O	O	O
電子元件	-	O	O	O	O	O
線材	-	O	O	O	O	O
配件	-	O	O	O	O	O

備考 1.〝超出 0.1 wt %〞及〝超出 0.01 wt %〞係指限用物質之百分比含量超出百分比含量基準值。
備考 2.〝〇〞係指該項限用物質之百分比含量未超出百分比含量基準值。
備考 3.〝－〞係指該項限用物質為排除項目。

China RoHS

电子信息产品污染控制标示

依据中国发布的「电子信息产品污染控制管理办法」及 SJ/T 11364-2014「电子信息产品污染控制标示要求」，电子信息产品应进行标示，藉以向消费者揭露产品中含有的有毒有害物质或元素不致发生外泄或突变从而对环境造成污染或对人身、财产造成严重损害的期限。依上述规定，您可于本产品之印刷电路板上看见图一之标示。图一中之数字为产品之环保使用期限。由此可知此主板之环保使用期限为 10 年。



图一

有毒有害物质或元素的名称及含量说明

若您欲了解此产品的有毒有害物质或元素的名称及含量说明，请参照以下表格及说明。

部件名称	有害物质或元素					
	铅 (Pb)	镉 (Cd)	汞 (Hg)	六价铬 (Cr(VI))	多溴联苯 (PBB)	多溴二苯醚 (PBDE)
印刷电路板及电子组件	X	O	O	O	O	O
外部信号连接头及线材	X	O	O	O	O	O

以上表格依据 SJ/T 11364-2014 的规定编制。
O: 表示该有害物质在该部件所有均质材料中的含量均在 GB/T 26572 规定的限量要求以下。
X: 表示该有害物质至少在该部件的某一均质材料中的含量超出 GB/T 26572 规定的限量要求。
备注：此产品所标示之环保使用年限，系指在一般正常使用状况下。