ASRock

# B550M/ac

User Manual

Version 1.0
Published May 2020
Copyright©2020 ASRock INC. All rights reserved.

## Copyright Notice:

No part of this documentation may be reproduced, transcribed, transmitted, or translated in any language, in any form or by any means, except duplication of documentation by the purchaser for backup purpose, without written consent of ASRock Inc.

Products and corporate names appearing in this documentation may or may not be registered trademarks or copyrights of their respective companies, and are used only for identification or explanation and to the owners' benefit, without intent to infringe.

## Disclaimer:

Specifications and information contained in this documentation are furnished for informational use only and subject to change without notice, and should not be constructed as a commitment by ASRock. ASRock assumes no responsibility for any errors or omissions that may appear in this documentation.

With respect to the contents of this documentation, ASRock does not provide warranty of any kind, either expressed or implied, including but not limited to the implied warranties or conditions of merchantability or fitness for a particular purpose.

In no event shall ASRock, its directors, officers, employees, or agents be liable for any indirect, special, incidental, or consequential damages (including damages for loss of profits, loss of business, loss of data, interruption of business and the like), even if ASRock has been advised of the possibility of such damages arising from any defect or error in the documentation or product.

This device complies with Part 15 of the FCC Rules. Operation is subject to the following two conditions:

(1) this device may not cause harmful interference, and
(2) this device must accept any interference received, including interference that may cause undesired operation.

## CALIFORNIA, USA ONLY

The Lithium battery adopted on this motherboard contains Perchlorate, a toxic substance controlled in Perchlorate Best Management Practices (BMP) regulations passed by the California Legislature. When you discard the Lithium battery in California, USA, please follow the related regulations in advance.
"Perchlorate Material-special handling may apply, see www.dtsc.ca.gov/hazardouswaste/perchlorate"

**ASRock Website: http://www.asrock.com**

## AUSTRALIA ONLY

Our goods come with guarantees that cannot be excluded under the Australian Consumer Law. You are entitled to a replacement or refund for a major failure and compensation for any other reasonably foreseeable loss or damage caused by our goods. You are also entitled to have the goods repaired or replaced if the goods fail to be of acceptable quality and the failure does not amount to a major failure. If you require assistance please call ASRock Tel : +886-2-28965588 ext.123 (Standard International call charges apply)

The terms HDMI® and HDMI High-Definition Multimedia Interface, and the HDMI logo are trademarks or registered trademarks of HDMI Licensing LLC in the United States and other countries.



## CE Warning

This device complies with directive 2014/53/EU issued by the Commision of the European Community.

This equipment complies with EU radiation exposure limits set forth for an uncontrolled environment.
This equipment should be installed and operated with minimum distance 20cm between the radiator & your body.

Operations in the 5.15-5.35GHz band are restricted to indoor usage only.

| | | | | | | | |
|---|---|---|---|---|---|---|---|
| | AT | BE | BG | CH | CY | CZ | DE |
| | DK | EE | EL | ES | FI | FR | HR |
| | HU | IE | IS | IT | LI | LT | LU |
| | LV | MT | NL | NO | PL | PT | RO |
| | SE | SI | SK | TR | UK | | |

CE

Radio transmit power per transceiver type

| Function | Frequency | Maximum Output Power (EIRP) |
|---|---|---|
| WiFi | 2400-2483.5 MHz | 18.5 + / -1.5 dbm |
| | 5150-5250 MHz | 21.5 + / -1.5 dbm |
| | 5250-5350 MHz | 18.5 + / -1.5 dbm (no TPC)<br>21.5 + / -1.5 dbm (TPC) |
| | 5470-5725 MHz | 25.5 + / -1.5 dbm (no TPC)<br>28.5 + / -1.5 dbm (TPC) |
| Bluetooth | 2400-2483.5 MHz | 8.5 + / -1.5 dbm |

# Contents


**Chapter 1 Introduction** **1**

1.1 Package Contents 1

1.2 Specifications 2

1.3 Motherboard Layout 7

1.4 I/O Panel 9

1.5 WiFi-802.11ac Module and ASRock WiFi 2.4/5 GHz Antennas 11

**Chapter 2 Installation** **13**

2.1 Installing the CPU 14

2.2 Installing the CPU Fan and Heatsink 16

2.3 Installing Memory Modules (DIMM) 24

2.4 Expansion Slots (PCI Express Slots) 27

2.5 Jumpers Setup 28

2.6 Onboard Headers and Connectors 29

2.7 Post Status Checker 35

2.8 CrossFireX™ and Quad CrossFireX™ Operation Guide 36

2.8.1 Installing Two CrossFireX™-Ready Graphics Cards 36

2.8.2 Driver Installation and Setup 38

2.9 M.2_SSD (NGFF) Module Installation Guide (M2_1) 39

**Chapter 3 Software and Utilities Operation** **42**

3.1 Installing Drivers 42

3.2 ASRock Motherboard Utility (A-Tuning) 43

3.2.1 Installing ASRock Motherboard Utility (A-Tuning) 43
3.2.2 Using ASRock Motherboard Utility (A-Tuning) 43
3.3 ASRock Live Update & APP Shop 46
3.3.1 UI Overview 46
3.3.2 Apps 47
3.3.3 BIOS & Drivers 50
3.3.4 Setting 51
3.4 Nahimic Audio 52
3.5 ASRock Polychrome SYNC 53
**Chapter 4 UEFI SETUP UTILITY 56**
4.1 Introduction 56
4.1.1 UEFI Menu Bar 56
4.1.2 Navigation Keys 57
4.2 Main Screen 58
4.3 OC Tweaker Screen 59
4.4 Advanced Screen 63
4.4.1 CPU Configuration 64
4.4.2 Onboard Devices Configuration 65
4.4.3 Storage Configuration 67
4.4.4 ACPI Configuration 68
4.4.5 Trusted Computing 69
4.4.6 AMD CBS 70
4.4.7 AMD PBS 71
4.4.8 AMD Overclocking 72

4.5 Tools 73
4.6 Hardware Health Event Monitoring Screen 74
4.7 Security Screen 76
4.8 Boot Screen 77
4.9 Exit Screen 80

# Chapter 1 Introduction

Thank you for purchasing ASRock B550M/ac motherboard, a reliable motherboard produced under ASRock's consistently stringent quality control. It delivers excellent performance with robust design conforming to ASRock's commitment to quality and endurance.

In this documentation, Chapter 1 and 2 contains the introduction of the motherboard and step-by-step installation guides. Chapter 3 contains the operation guide of the software and utilities. Chapter 4 contains the configuration guide of the BIOS setup.

*Because the motherboard specifications and the BIOS software might be updated, the content of this documentation will be subject to change without notice. In case any modifications of this documentation occur, the updated version will be available on ASRock's website without further notice. If you require technical support related to this motherboard, please visit our website for specific information about the model you are using. You may find the latest VGA cards and CPU support list on ASRock's website as well. ASRock website http://www.asrock.com.*

## 1.1 Package Contents

- ASRock B550M/ac Motherboard (Micro ATX Form Factor)
- ASRock B550M/ac Quick Installation Guide
- ASRock B550M/ac Support CD
- 1 x I/O Panel Shield
- 2 x Serial ATA (SATA) Data Cables (Optional)
- 2 x ASRock WiFi 2.4/5 GHz Antennas (Optional)
- 1 x Screw for M.2 Socket (Optional)

## 1.2 Specifications

| | |
|---|---|
| **Platform** | • Micro ATX Form Factor<br>• Solid Capacitor design<br>• 2oz Copper PCB |
| **CPU** | • Supports 3rd Gen AMD AM4 Ryzen™ / future AMD Ryzen™ Processors (3000 and 4000 Series Processors)*<br>* Not compatible with AMD Ryzen™ 5 3400G and Ryzen™ 3 3200G.<br>• Digi Power design<br>• 8 Power Phase design |
| **Chipset** | • AMD B550 |
| **Memory** | • Dual Channel DDR4 Memory Technology<br>• 4 x DDR4 DIMM Slots<br>• AMD Ryzen series CPUs (Matisse) support DDR4 4533+(OC)/4466(OC)/4400(OC)/4333(OC)/4266(OC)/4200(OC)/4133(OC)/4000(OC)/3866(OC)/3800(OC)/3733(OC)/3600(OC)/3466(OC)/3200/2933/2667/2400/2133 ECC & non-ECC, un-buffered memory*<br>• AMD Ryzen series APUs (Renoir) support DDR4 4733+(OC)/4666(OC)/4600(OC)/4533(OC)/4466(OC)/4400(OC)/4333(OC)/4266(OC)/4200(OC)/4133(OC)/4000(OC)/3866(OC)/3800(OC)/3733(OC)/3600(OC)/3466(OC)/3200/2933/2667/2400/2133 ECC & non-ECC, un-buffered memory*<br>* Please refer to Memory Support List on ASRock's website for more information. (http://www.asrock.com/)<br>* Please refer to page 24 for DDR4 UDIMM maximum frequency support.<br>• Max. capacity of system memory: 128GB<br>• Supports Extreme Memory Profile (XMP) memory modules<br>• 15µ Gold Contact in DIMM Slots |
| **Expansion Slot** | **AMD Ryzen series CPUs (Matisse)**<br>• 2 x PCI Express x16 Slots (PCIE1: Gen4x16 mode; PCIE3: Gen3 x4 mode)* |

English

**AMD Ryzen series APUs (Renoir)**

- 2 x PCI Express x16 Slots (PCIE1: Gen3x16 mode; PCIE3: Gen3 x4 mode)*

* Supports NVMe SSD as boot disks

- 1 x PCI Express 3.0 x1 Slot
- Supports AMD Quad CrossFireX™ and CrossFireX™
- 1 x M.2 Socket (Key E) with the bundled WiFi-802.11ac module

**Graphics**

- **Integrated AMD Radeon™ Vega Series Graphics in Ryzen Series APU***

* Actual support may vary by CPU

- DirectX 12, Pixel Shader 5.0
- Shared memory default 2GB. Max Shared memory supports up to 16GB.

* The Max shared memory 16GB requires 32GB system memory installed.

- Supports HDMI 2.1 with max. resolution up to 4K x 2K (4096x2160) @ 60Hz
- Supports Auto Lip Sync, Deep Color (12bpc), xvYCC and HBR (High Bit Rate Audio) with HDMI 2.1 Port (Compliant HDMI monitor is required)
- Supports HDR (High Dynamic Range) with HDMI 2.1
- Supports HDCP 2.3 with HDMI 2.1 Port
- Supports 4K Ultra HD (UHD) playback with HDMI 2.1 Port
- Supports Microsoft PlayReady®

**Audio**

- 7.1 CH HD Audio with Content Protection (Realtek ALC1200 Audio Codec)
- Premium Blu-ray Audio support
- Supports Surge Protection
- PCB Isolate Shielding
- Individual PCB Layers for R/L Audio Channel
- Nahimic Audio

| | |
|---|---|
| **LAN** | • PCIE x1 Gigabit LAN 10/100/1000 Mb/s<br>• Realtek RTL8111H<br>• Supports Wake-On-LAN<br>• Supports Lightning/ESD Protection<br>• Supports Energy Efficient Ethernet 802.3az<br>• Supports PXE |
| **Wireless LAN** | • Intel® 802.11ac WiFi Module<br>• Supports IEEE 802.11a/b/g/n/ac<br>• Supports Dual-Band (2.4/5 GHz)<br>• Supports high speed wireless connections up to 433Mbps<br>• Supports Bluetooth 4.2 + High speed class II |
| **Rear Panel I/O** | • 2 x Antenna Ports<br>• 1 x PS/2 Mouse/Keyboard Port<br>• 1 x HDMI Port<br>• 4 x USB 3.2 Gen1 Ports (ASMedia ASM1074 hub) (Supports ESD Protection)<br>• 2 x USB 2.0 Ports (Supports ESD Protection)<br>• 1 x RJ-45 LAN Port with LED (ACT/LINK LED and SPEED LED)<br>• HD Audio Jacks: Line in / Front Speaker / Microphone |
| **Storage** | • 4 x SATA3 6.0 Gb/s Connectors, support RAID (RAID 0, RAID 1 and RAID 10), NCQ, AHCI and Hot Plug<br>• 1 x Hyper M.2 Socket (M2_1), supports M Key type 2280 M.2 PCI Express module up to Gen4x4 (64 Gb/s) (with Matisse) or Gen3x4 (32 Gb/s) (with Renoir)*<br>* Supports NVMe SSD as boot disks<br>* Supports ASRock U.2 Kit |
| **Connector** | • 1 x COM Port Header<br>• 1 x SPI TPM Header<br>• 1 x Power LED and Speaker Header<br>• 2 x RGB LED Headers<br>* Support in total up to 12V/3A, 36W LED Strip |

| | |
|---|---|
| | • 2 x Addressable LED Headers<br>* Support in total up to 5V/3A, 15W LED Strip<br>• 1 x CPU Fan Connector (4-pin)<br>* The CPU Fan Connector supports the CPU fan of maximum 1A (12W) fan power.<br>• 3 x Chassis/Water Pump Fan Connectors (4-pin) (Smart Fan Speed Control)<br>* The Chassis/Water Pump Fan supports the water cooler fan of maximum 2A (24W) fan power.<br>* CHA_FAN1/WP, CHA_FAN2/WP and CHA_FAN4/WP can auto detect if 3-pin or 4-pin fan is in use.<br>• 1 x 24 pin ATX Power Connector<br>• 1 x 8 pin 12V Power Connector<br>• 1 x Front Panel Audio Connector<br>• 2 x USB 2.0 Headers (Support 4 USB 2.0 ports) (Supports ESD Protection)<br>• 2 x USB 3.2 Gen1 Headers (Support 4 USB 3.2 Gen1 ports) (Supports ESD Protection) |
| **BIOS Feature** | • AMI UEFI Legal BIOS with GUI support<br>• Supports "Plug and Play"<br>• ACPI 5.1 compliance wake up events<br>• Supports jumperfree<br>• SMBIOS 2.3 support<br>• CPU, CPU VDDCR_SOC, DRAM, VPPM, +1.8VSB Voltage Multi-adjustment |
| **Hardware Monitor** | • Temperature Sensing: CPU, Chassis/Water Pump Fans<br>• Fan Tachometer: CPU, Chassis/Water Pump Fans<br>• Quiet Fan (Auto adjust chassis fan speed by CPU temperature): CPU, Chassis/Water Pump Fans<br>• Fan Multi-Speed Control: CPU, Chassis/Water Pump Fans<br>• Voltage monitoring: +12V, +5V, +3.3V, CPU Vcore, CPU VDDCR_SOC, DRAM, VPPM, +1.8V |

| | |
|---|---|
| **OS** | • Microsoft® Windows® 10 64-bit |
| **Certifications** | • FCC, CE<br>• ErP/EuP ready (ErP/EuP ready power supply is required) |

** For detailed product information, please visit our website: http://www.asrock.com*

*Please realize that there is a certain risk involved with overclocking, including adjusting the setting in the BIOS, applying Untied Overclocking Technology, or using third-party overclocking tools. Overclocking may affect your system's stability, or even cause damage to the components and devices of your system. It should be done at your own risk and expense. We are not responsible for possible damage caused by overclocking.*

## 1.3 Motherboard Layout

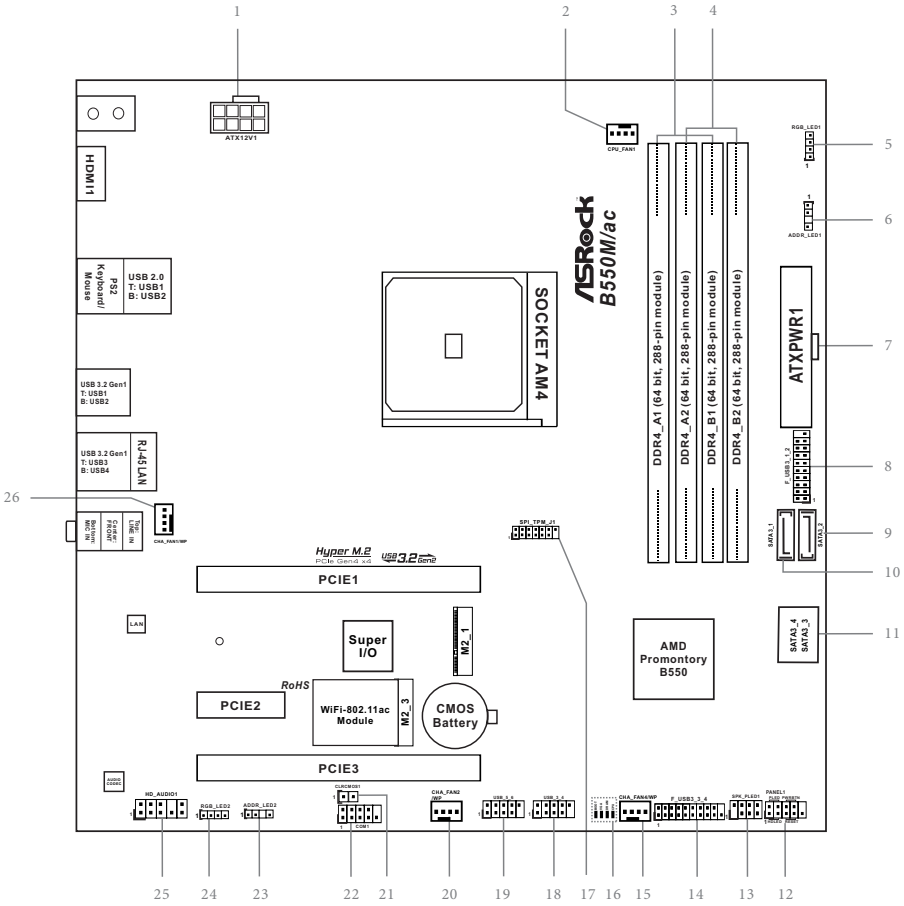

| No. | Description |
|---|---|
| 1 | 8 pin 12V Power Connector (ATX12V1) |
| 2 | CPU Fan Connector (CPU_FAN1) |
| 3 | 2 x 288-pin DDR4 DIMM Slots (DDR4_A1, DDR4_B1) |
| 4 | 2 x 288-pin DDR4 DIMM Slots (DDR4_A2, DDR4_B2) |
| 5 | RGB LED Header (RGB_LED1) |
| 6 | Addressable LED Header (ADDR_LED1) |
| 7 | ATX Power Connector (ATXPWR1) |
| 8 | USB 3.2 Gen1 Header (F_USB3_1_2) |
| 9 | SATA3 Connector (SATA3_2) |
| 10 | SATA3 Connector (SATA3_1) |
| 11 | SATA3 Connector (SATA3_4)(Upper), SATA3 Connector (SATA3_3)(Lower) |
| 12 | System Panel Header (PANEL1) |
| 13 | Power LED and Speaker Header (SPK_PLED1) |
| 14 | USB 3.2 Gen1 Header (F_USB3_3_4) |
| 15 | Chassis/Water Pump Fan Connector (CHA_FAN4/WP) |
| 16 | Post Status Checker (PSC) |
| 17 | SPI TPM Header (SPI_TPM_J1) |
| 18 | USB 2.0 Header (USB_3_4) |
| 19 | USB 2.0 Header (USB_5_6) |
| 20 | Chassis/Water Pump Fan Connector (CHA_FAN2/WP) |
| 21 | Clear CMOS Jumper (CLRCMOS1) |
| 22 | COM Port Header (COM1) |
| 23 | Addressable LED Header (ADDR_LED2) |
| 24 | RGB LED Header (RGB_LED2) |
| 25 | Front Panel Audio Header (HD_AUDIO1) |
| 26 | Chassis/Water Pump Fan Connector (CHA_FAN1/WP) |

## 1.4 I/O Panel

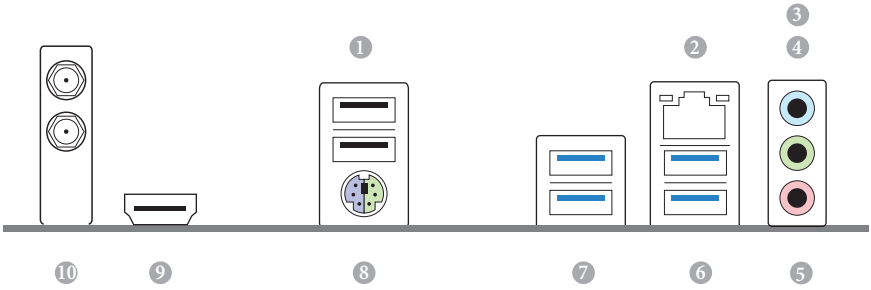


| No. | Description | No. | Description |
|---|---|---|---|
| 1 | USB 2.0 Ports (USB_12)* | 6 | USB 3.2 Gen1 Ports (USB3_34) |
| 2 | LAN RJ-45 Port** | 7 | USB 3.2 Gen1 Ports (USB3_12) |
| 3 | Line In (Light Blue)*** | 8 | PS/2 Mouse/Keyboard Port |
| 4 | Front Speaker (Lime)*** | 9 | HDMI Port |
| 5 | Microphone (Pink)*** | 10 | Antenna Ports |

** Please note that the USB_2 consumes auxiliary power (+5VSB) while the other USB ports consume DUAL Power (+5VDUAL). The USB_2 is optimal for connecting the USB Type speaker and headset.*

*** There are two LEDs on each LAN port. Please refer to the table below for the LAN port LED indications.*

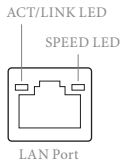


| Activity / Link LED | | Speed LED | |
|---|---|---|---|
| **Status** | **Description** | **Status** | **Description** |
| Off | No Link | Off | 10Mbps connection |
| Blinking | Data Activity | Orange | 100Mbps connection |
| On | Link | Green | 1Gbps connection |

*** ***Function of the Audio Ports in 7.1-channel Configuration***:

| Port | Function |
|---|---|
| Light Blue (Rear panel) | Rear Speaker Out |
| Lime (Rear panel) | Front Speaker Out |
| Pink (Rear panel) | Central /Subwoofer Speaker Out |
| Lime (Front panel) | Side Speaker Out |

## 1.5 WiFi-802.11ac Module and ASRock WiFi 2.4/5 GHz Antennas

### WiFi-802.11ac + BT Module

This motherboard comes with an exclusive WiFi 802.11 a/b/g/n/ac + BT v4.2 module that offers support for WiFi 802.11 a/b/g/n/ac connectivity standards and Bluetooth v4.2. WiFi + BT module is an easy-to-use wireless local area network (WLAN) adapter to support WiFi + BT. Bluetooth v4.2 standard features Smart Ready technology that adds a whole new class of functionality into the mobile devices. BT 4.2 also includes Low Energy Technology and ensures extraordinary low power consumption for PCs.

* The transmission speed may vary according to the environment.

## WiFi Antennas Installation Guide



***Step 1***

Prepare the WiFi 2.4/5 GHz Antennas that come with the package.

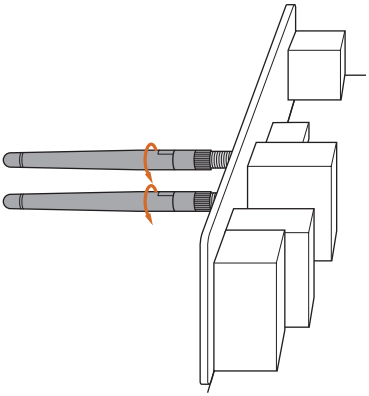

***Step 2***

Connect the two WiFi 2.4/5 GHz Antennas to the antenna connectors. Turn the antenna clockwise until it is securely connected.

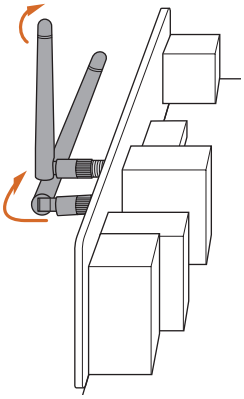

***Step 3***

Set the WiFi 2.4/5 GHz Antenna as shown in the illustration.

*You may need to adjust the direction of the antenna for a stronger signal.

# Chapter 2 Installation

This is a Micro ATX form factor motherboard. Before you install the motherboard, study the configuration of your chassis to ensure that the motherboard fits into it.

## Pre-installation Precautions

Take note of the following precautions before you install motherboard components or change any motherboard settings.

- Make sure to unplug the power cord before installing or removing the motherboard. Failure to do so may cause physical injuries to you and damages to motherboard components.
- In order to avoid damage from static electricity to the motherboard's components, NEVER place your motherboard directly on a carpet. Also remember to use a grounded wrist strap or touch a safety grounded object before you handle the components.
- Hold components by the edges and do not touch the ICs.
- Whenever you uninstall any components, place them on a grounded anti-static pad or in the bag that comes with the components.
- When placing screws to secure the motherboard to the chassis, please do not over-tighten the screws! Doing so may damage the motherboard.

## 2.1 Installing the CPU

*Unplug all power cables before installing the CPU.*

1

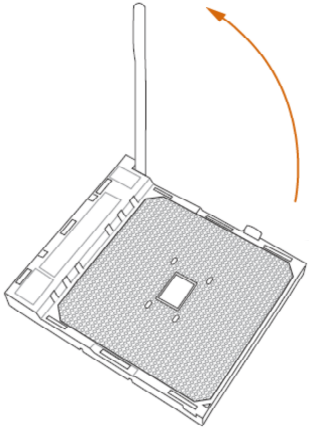

2

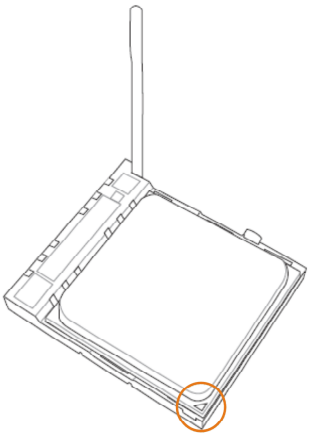

3

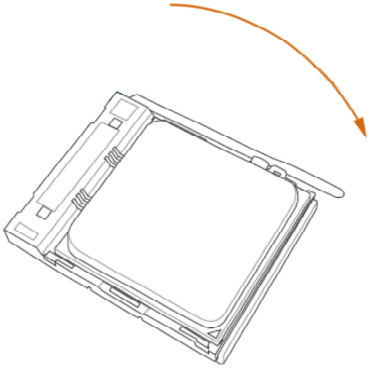

## 2.2 Installing the CPU Fan and Heatsink

After you install the CPU into this motherboard, it is necessary to install a larger heatsink and cooling fan to dissipate heat. You also need to spray thermal grease between the CPU and the heatsink to improve heat dissipation. Make sure that the CPU and the heatsink are securely fastened and in good contact with each other.

*Please turn off the power or remove the power cord before changing a CPU or heatsink.*

### Installing the CPU Box Cooler SR1

1

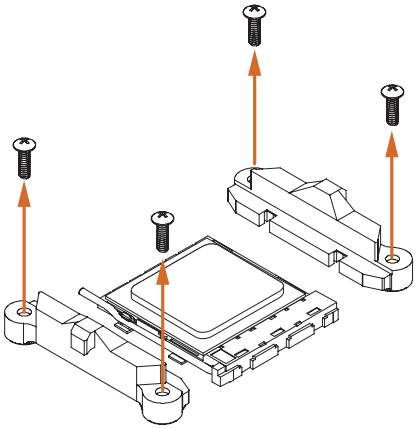

2

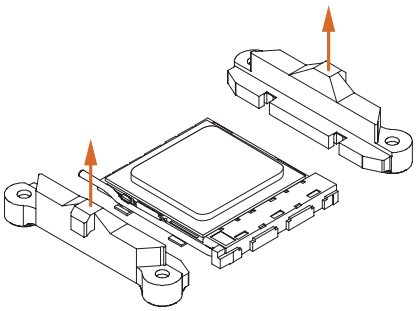

3

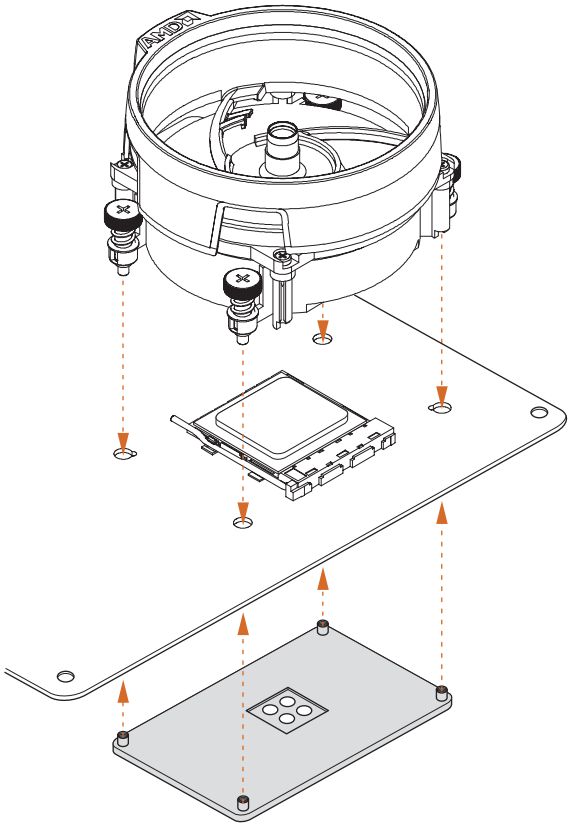


4

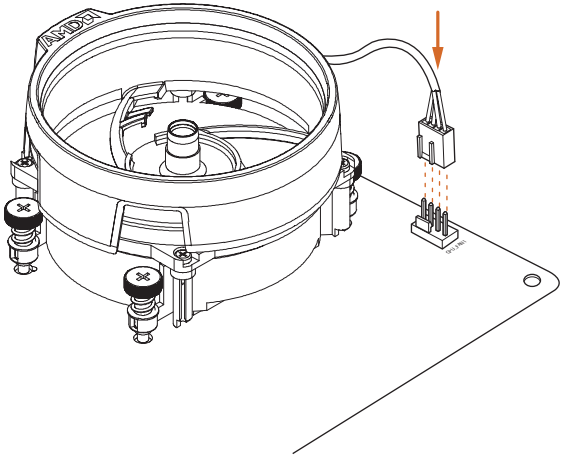

## Installing the AM4 Box Cooler SR2

1

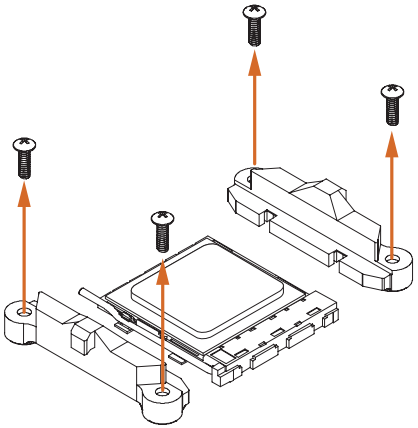

2

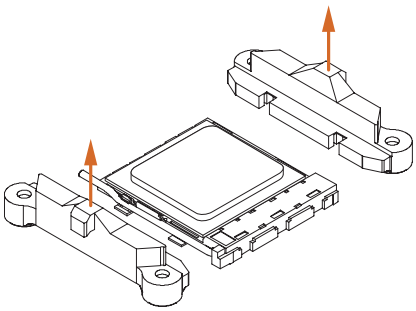

3

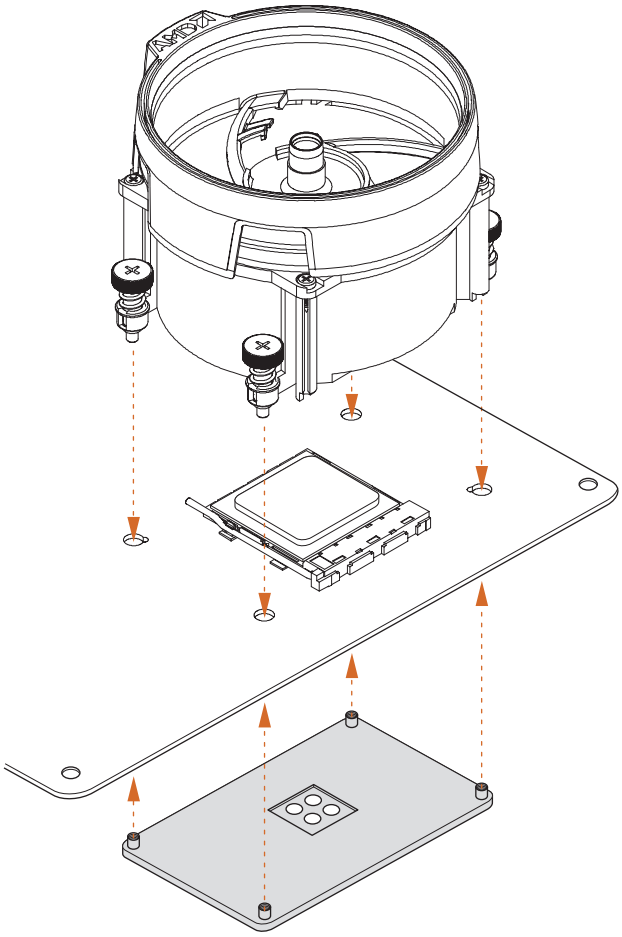

4

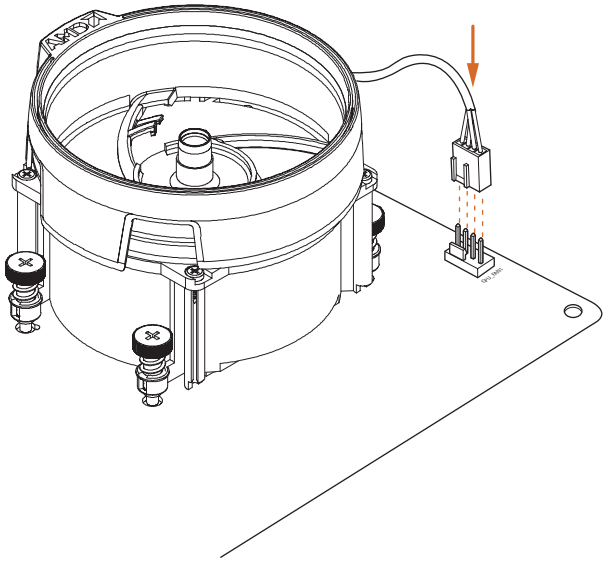

*The diagrams shown here are for reference only. The headers might be in a different position on your motherboard.

## Installing the AM4 Box Cooler SR3

1

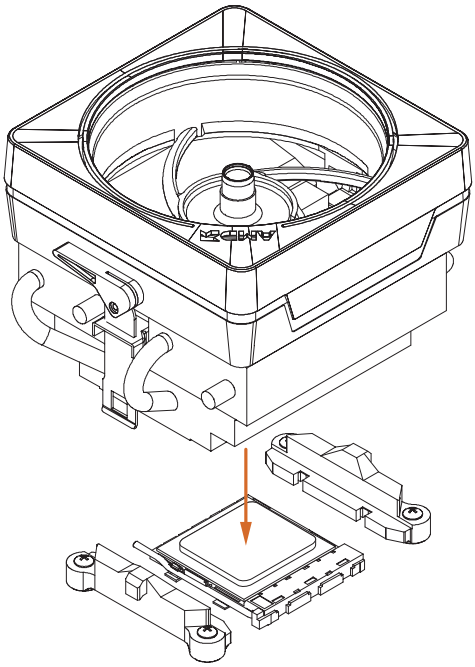

2

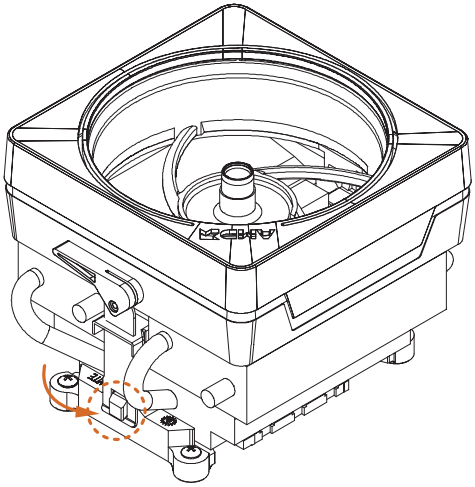

3

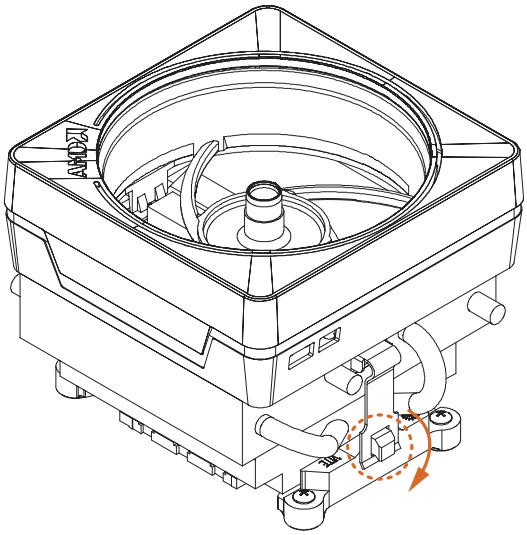


4

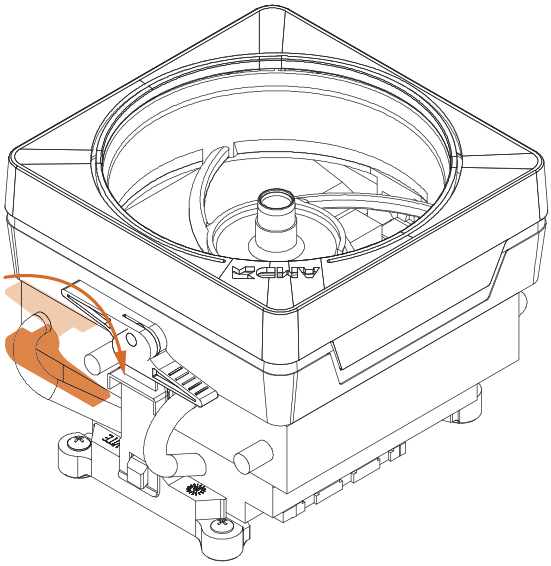

5

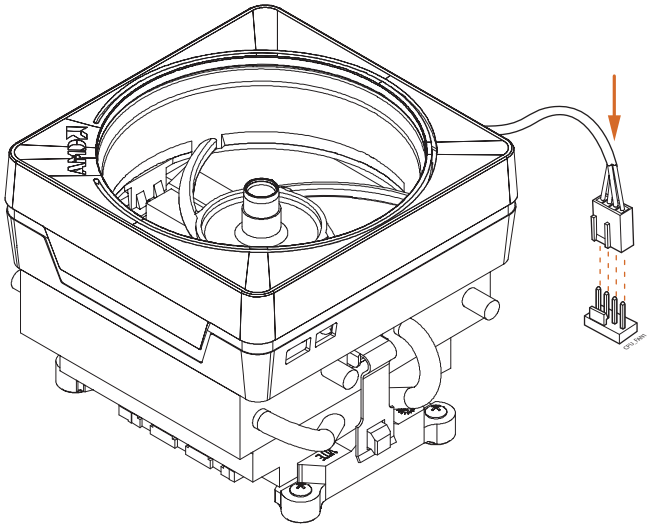

6

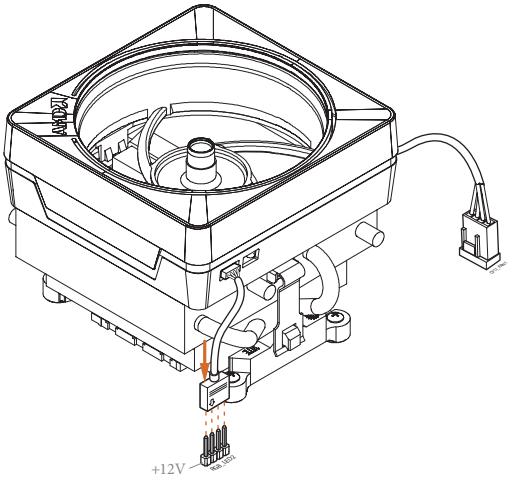


*The diagrams shown here are for reference only. The headers might be in a different position on your motherboard.

## 2.3 Installing Memory Modules (DIMM)

This motherboard provides four 288-pin DDR4 (Double Data Rate 4) DIMM slots, and supports Dual Channel Memory Technology.

1. *For dual channel configuration, you always need to install identical (the same brand, speed, size and chip-type) DDR4 DIMM pairs.*
2. *It is unable to activate Dual Channel Memory Technology with only one or three memory module installed.*
3. *It is not allowed to install a DDR, DDR2 or DDR3 memory module into a DDR4 slot; otherwise, this motherboard and DIMM may be damaged.*
4. *We suggest that you install the memory modules on DDR4_A2 and DDR4_B2 first for better DRAM compatibility on 2 DIMMs configuration.*

### AMD non-XMP Memory Frequency Support

Ryzen Series CPUs (Matisse):

| UDIMM Memory Slot | | | | Frequency (Mhz) |
|---|---|---|---|---|
| A1 | A2 | B1 | B2 | |
| - | SR | - | - | 3200 |
| - | DR | - | - | 3200 |
| - | SR | - | SR | 3200 |
| - | DR | - | DR | 3200 |
| SR | SR | SR | SR | 2933 |
| SR/DR | DR | SR/DR | DR | 2667 |
| SR/DR | SR/DR | SR/DR | SR/DR | 2667 |

Ryzen Series APUs (Renoir):

| UDIMM Memory Slot | | | | Frequency (Mhz) |
|---|---|---|---|---|
| A1 | A2 | B1 | B2 | |
| - | SR | - | - | 3200 |
| - | DR | - | - | 3200 |
| - | SR | - | SR | 3200 |
| - | DR | - | DR | 3200 |
| SR | SR | SR | SR | 2933 |
| SR/DR | DR | SR/DR | DR | 2667 |
| SR/DR | SR/DR | SR/DR | SR/DR | 2667 |

SR: Single rank DIMM, 1Rx4 or 1Rx8 on DIMM module label
DR: Dual rank DIMM, 2Rx4 or 2Rx8 on DIMM module label

*The DIMM only fits in one correct orientation. It will cause permanent damage to the motherboard and the DIMM if you force the DIMM into the slot at incorrect orientation.*

1

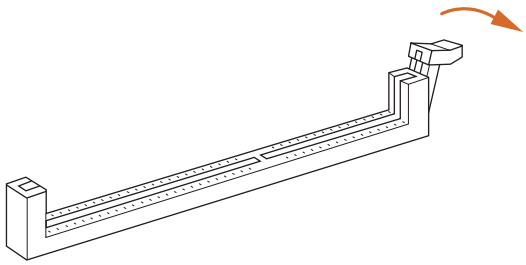

2

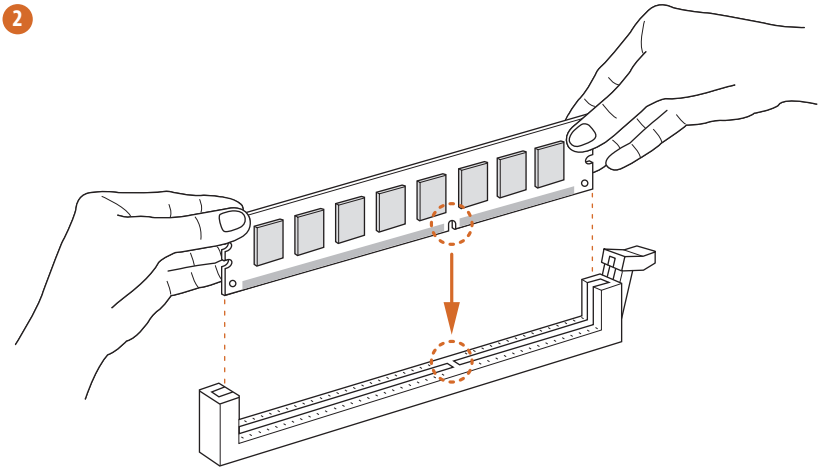

3

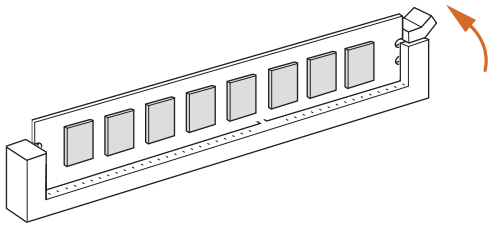

## 2.4 Expansion Slots (PCI Express Slots)

There are 3 PCI Express slots on the motherboard.

*Before installing an expansion card, please make sure that the power supply is switched off or the power cord is unplugged. Please read the documentation of the expansion card and make necessary hardware settings for the card before you start the installation.*

**PCIe slots:**

PCIE1 (PCIe 4.0 x16 slot) is used for PCI Express x16 lane width graphics cards.
PCIE2 (PCIe 3.0 x1 slot) is used for PCI Express x1 lane width cards.
PCIE3 (PCIe 3.0 x16 slot) is used for PCI Express x4 lane width graphics cards.

### PCIe Slot Configurations

| | PCIE1 | PCIE2 | PCIE3 |
|---|---|---|---|
| **Ryzen Series CPUs (Matisse)** | Gen4x16 | Gen3x1 | Gen3x4 |
| **Ryzen Series CPUs (Renoir)** | Gen3x16 | Gen3x1 | Gen3x4 |

*For a better thermal environment, please connect a chassis fan to the motherboard's chassis fan connector (CHA_FAN1/WP, CHA_FAN2/WP , CHA_FAN3/WP or CHA_FAN4/WP ) when using multiple graphics cards.*

## 2.5 Jumpers Setup

The illustration shows how jumpers are setup. When the jumper cap is placed on the pins, the jumper is "Short". If no jumper cap is placed on the pins, the jumper is "Open".

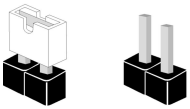


| | | |
|---|---|---|
| Clear CMOS Jumper<br>(CLRCMOS1)<br>(see p.7, No. 21) | <br>2-pin Jumper | Short: Clear CMOS<br>Open: Default |

CLRCMOS1 allows you to clear the data in CMOS. The data in CMOS includes system setup information such as system password, date, time, and system setup parameters. To clear and reset the system parameters to default setup, please turn off the computer and unplug the power cord, then use a jumper cap to short the pins on CLRCMOS1 for 3 seconds. Please remember to remove the jumper cap after clearing the CMOS. If you need to clear the CMOS when you just finish updating the BIOS, you must boot up the system first, and then shut it down before you do the clear-CMOS action.

## 2.6 Onboard Headers and Connectors

*Onboard headers and connectors are NOT jumpers. Do NOT place jumper caps over these headers and connectors. Placing jumper caps over the headers and connectors will cause permanent damage to the motherboard.*

System Panel Header
(9-pin PANEL1)
(see p.7, No. 12)

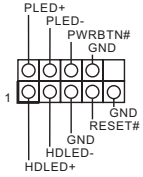


Connect the power button, reset button and system status indicator on the chassis to this header according to the pin assignments below. Note the positive and negative pins before connecting the cables.

***PWRBTN (Power Button):***
*Connect to the power button on the chassis front panel. You may configure the way to turn off your system using the power button.*

***RESET (Reset Button):***
*Connect to the reset button on the chassis front panel. Press the reset button to restart the computer if the computer freezes and fails to perform a normal restart.*

***PLED (System Power LED):***
*Connect to the power status indicator on the chassis front panel. The LED is on when the system is operating. The LED keeps blinking when the system is in S1/S3 sleep state. The LED is off when the system is in S4 sleep state or powered off (S5).*

***HDLED (Hard Drive Activity LED):***
*Connect to the hard drive activity LED on the chassis front panel. The LED is on when the hard drive is reading or writing data.*

*The front panel design may differ by chassis. A front panel module mainly consists of power button, reset button, power LED, hard drive activity LED, speaker and etc. When connecting your chassis front panel module to this header, make sure the wire assignments and the pin assignments are matched correctly.*

Power LED and Speaker Header
(7-pin SPK_PLED1)
(see p.7, No. 13)

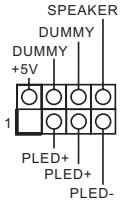


Please connect the chassis power LED and the chassis speaker to this header.

Serial ATA3 Connectors
(SATA3_1:
see p.7, No. 9)
(SATA3_2:
see p.7, No. 10)
(SATA3_3:
see p.7, No. 11)(Lower)
(SATA3_4:
see p.7, No. 11)(Upper)

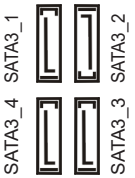


These four SATA3 connectors support SATA data cables for internal storage devices with up to 6.0 Gb/s data transfer rate.

USB 2.0 Headers
(9-pin USB_3_4)
(see p.7, No. 18)
(9-pin USB_5_6)
(see p.7, No. 19)

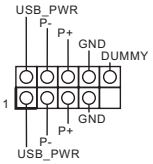


There are two headers on this motherboard. Each USB 2.0 header can support two ports.

USB 3.2 Gen1 Headers
(19-pin F_USB3_1_2)
(see p.7, No. 8)

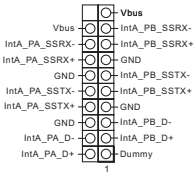


There are two headers on this motherboard. Each USB 3.2 Gen1 header can support two ports.

(19-pin F_USB3_3_4)
(see p.7, No. 14)

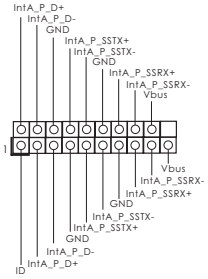

Front Panel Audio Header
(9-pin HD_AUDIO1)
(see p.7, No. 25)

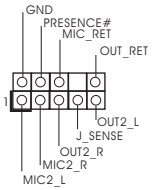


This header is for connecting audio devices to the front audio panel.

1. *High Definition Audio supports Jack Sensing, but the panel wire on the chassis must support HDA to function correctly. Please follow the instructions in our manual and chassis manual to install your system.*
2. *If you use an AC'97 audio panel, please install it to the front panel audio header by the steps below:*
   *A. Connect Mic_IN (MIC) to MIC2_L.*
   *B. Connect Audio_R (RIN) to OUT2_R and Audio_L (LIN) to OUT2_L.*
   *C. Connect Ground (GND) to Ground (GND).*
   *D. MIC_RET and OUT_RET are for the HD audio panel only. You don't need to connect them for the AC'97 audio panel.*
   *E. To activate the front mic, go to the "FrontMic" Tab in the Realtek Control panel and adjust "Recording Volume".*

Chassis Water Pump Fan Connectors
(4-pin CHA_FAN1/WP)
(see p.7, No. 26)

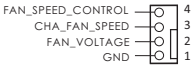


This motherboard provides three 4-Pin water cooling chassis fan connectors. If you plan to connect a 3-Pin chassis water cooler fan, please connect it to Pin 1-3.

(4-pin CHA_FAN2/WP)
(see p.7, No. 20)
(4-pin CHA_FAN4/WP)
(see p.7, No. 15)

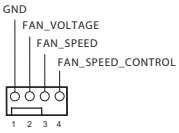

CPU Fan Connector
(4-pin CPU_FAN1)
(see p.7, No. 2)

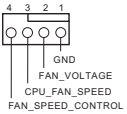


This motherboard provides a 4-Pin CPU fan (Quiet Fan) connector. If you plan to connect a 3-Pin CPU fan, please connect it to Pin 1-3.

---

ATX Power Connector
(24-pin ATXPWR1)
(see p.7, No. 7)

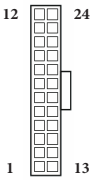


This motherboard provides a 24-pin ATX power connector. To use a 20-pin ATX power supply, please plug it along Pin 1 and Pin 13.

---

ATX 12V Power Connector
(8-pin ATX12V1)
(see p.7, No. 1)

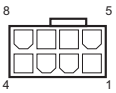


This motherboard provides an 8-pin ATX 12V power connector. To use a 4-pin ATX power supply, please plug it along Pin 1 and Pin 5.
***Warning: Please make sure that the power cable connected is for the CPU and not the graphics card. Do not plug the PCIe power cable to this connector.**

---

Serial Port Header
(9-pin COM1)
(see p.7, No. 22)

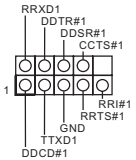


This COM1 header supports a serial port module.

SPI TPM Header
(13-pin SPI_TPM_J1)
(see p.7, No. 17)

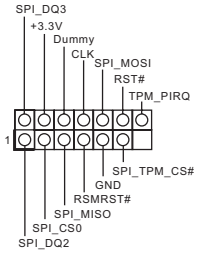


This connector supports SPI Trusted Platform Module (TPM) system, which can securely store keys, digital certificates, passwords, and data. A TPM system also helps enhance network security, protects digital identities, and ensures platform integrity.

RGB LED Headers
(4-pin RGB_LED1)
(see p.7, No. 5)




(4-pin RGB_LED2)
(see p.7, No. 23)




These two RGB headers are used to connect RGB LED extension cable which allows users to choose from various LED lighting effects.

**Caution: Never install the RGB LED cable in the wrong orientation; otherwise, the cable may be damaged.**

*Please refer to page 53 for further instructions on these two headers.

Addressable LED Headers
(3-pin ADDR_LED1)
(see p.7, No. 6)

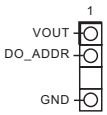


(3-pin ADDR_LED2)
(see p.7, No. 24)

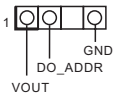


These two Addressable headers are used to connect Addressable LED extension cable which allows users to choose from various LED lighting effects.
**Caution: Never install the Addressable LED cable in the wrong orientation; otherwise, the cable may be damaged.**
*Please refer to page 54 for further instructions on this header.

## 2.7 Post Status Checker

Post Status Checker (PSC) diagnoses the computer when users power on the machine. It emits a red light to indicate whether the CPU, memory, VGA or storage is dysfunctional. The lights go off if the four mentioned above are functioning normally.

## 2.8 CrossFireX™ and Quad CrossFireX™ Operation Guide

This motherboard supports CrossFireX™ and Quad CrossFireX™ that allows you to install up to two identical PCI Express x16 graphics cards.

1. *You should only use identical CrossFireX™-ready graphics cards that are AMD certified.*
2. *Make sure that your graphics card driver supports AMD CrossFireX™ technology. Download the drivers from the AMD's website: www.amd.com*
3. *Make sure that your power supply unit (PSU) can provide at least the minimum power your system requires. It is recommended to use a AMD certified PSU. Please refer to the AMD's website for details.*
4. *If you pair a 12-pipe CrossFireX™ Edition card with a 16-pipe card, both cards will operate as 12-pipe cards while in CrossFireX™ mode.*
5. *Different CrossFireX™ cards may require different methods to enable CrossFireX™. Please refer to AMD graphics card manuals for detailed installation guide.*

### 2.8.1 Installing Two CrossFireX™-Ready Graphics Cards

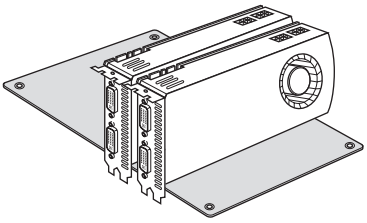

***Step 1***

Insert one graphics card into PCIE1 slot and the other graphics card to PCIE3 slot. Make sure that the cards are properly seated on the slots.




CrossFire Bridge

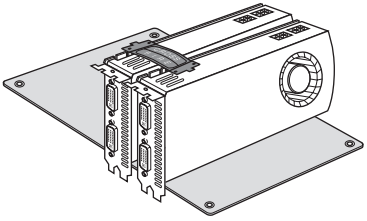

***Step 2***

Connect two graphics cards by installing a CrossFire Bridge on the CrossFire Bridge Interconnects on the top of the graphics cards. (The CrossFire Bridge is provided with the graphics card you purchase, not bundled with this motherboard. Please refer to your graphics card vendor for details.)

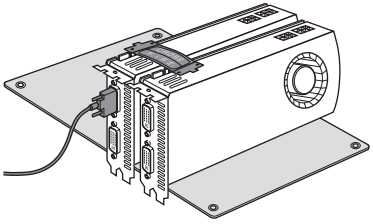

***Step 3***

Connect a VGA/DVI/DP/HDMI cable from the monitor to the corresponding port on the graphics card installed to the PCIE1 slot.

## 2.8.2 Driver Installation and Setup

***Step 1***

Power on your computer and boot into OS.

***Step 2***

Remove the AMD drivers if you have any VGA drivers installed in your system.

*The Catalyst Uninstaller is an optional download. We recommend using this utility to uninstall any previously installed Catalyst drivers prior to installation. Please check AMD's website for AMD driver updates.*

***Step 3***

Install the required drivers and CATALYST Control Center then restart your computer. Please check AMD's website for details.




AMD Catalyst Control Center

***Step 4***

Double-click the **AMD Catalyst Control Center** icon in the Windows® system tray.

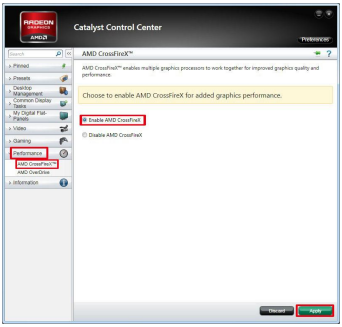


***Step 5***

In the left pane, click **Performance** and then **AMD CrossFireX™**. Then select **Enable AMD CrossFireX** and click **Apply**. Select the GPU number according to your graphics card and click **Apply**.

English

## 2.9 M.2_SSD (NGFF) Module Installation Guide (M2_1)

The M.2, also known as the Next Generation Form Factor (NGFF), is a small size and versatile card edge connector that aims to replace mPCIe and mSATA.
The Hyper M.2 Socket (M2_1) supports M Key type 2280 M.2 PCI Express module up to Gen4x4 (64 Gb/s) (with Matisse) or Gen3x4 (32 Gb/s) (with Renoir).

### Installing the M.2_SSD (NGFF) Module

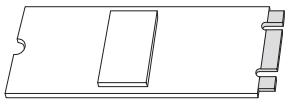

***Step 1***

Prepare a M.2_SSD (NGFF) module and the screw.

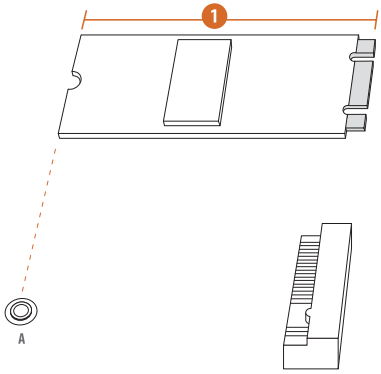


***Step 2***

Depending on the PCB type and length of your M.2_SSD (NGFF) module, find the corresponding nut location to be used.

| No. | 1 |
|---|---|
| Nut Location | A |
| PCB Length | 8cm |
| Module Type | Type2280 |

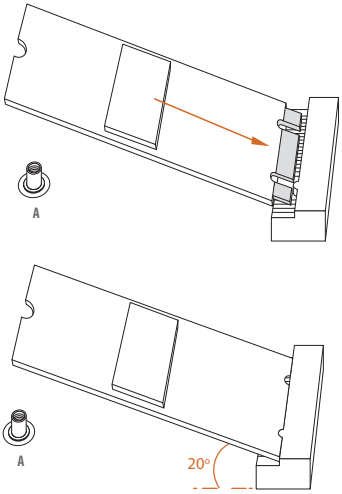


***Step 3***

Align and gently insert the M.2 (NGFF) SSD module into the M.2 slot. Please be aware that the M.2 (NGFF) SSD module only fits in one orientation.

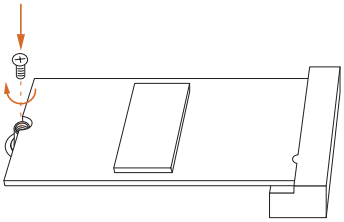

***Step 4***

Tighten the screw with a screwdriver to secure the module into place. Please do not overtighten the screw as this might damage the module.

## M.2_SSD (NGFF) Module Support List (M2_1)

| Vendor | Interface | P/N |
|---|---|---|
| ADATA | PCIe3 x4 | ASX7000NP-128GT-C |
| ADATA | PCIe3 x4 | ASX8000NP-256GM-C |
| ADATA | PCIe3 x4 | ASX7000NP-256GT-C |
| ADATA | PCIe3 x4 | ASX8000NP-512GM-C |
| ADATA | PCIe3 x4 | ASX7000NP-512GT-C |
| Apacer | PCIe3 x4 | AP240GZ280 |
| Corsair | PCIe3 x4 | CSSD-F240GBMP500 |
| Intel | PCIe3 x4 | SSDPEKKF256G7 |
| Intel | PCIe3 x4 | SSDPEKKF512G7 |
| Kingston | PCIe3 x4 | SKC1000/480G |
| Kingston | PCIe2 x4 | SH2280S3/480G |
| OCZ | PCIe3 x4 | RVD400 -M2280-512G (NVME) |
| PATRIOT | PCIe3 x4 | PH240GPM280SSDR NVME |
| Plextor | PCIe3 x4 | PX-128M8PeG |
| Plextor | PCIe3 x4 | PX-1TM8PeG |
| Plextor | PCIe3 x4 | PX-256M8PeG |
| Plextor | PCIe3 x4 | PX-512M8PeG |
| Plextor | PCIe | PX-G256M6e |
| Plextor | PCIe | PX-G512M6e |
| Samsung | PCIe3 x4 | SM961 MZVPW128HEGM (NVM) |
| Samsung | PCIe3 x4 | PM961 MZVLW128HEGR (NVME) |
| Samsung | PCIe3 x4 | 960 EVO (MZ-V6E250) (NVME) |
| Samsung | PCIe3 x4 | 960 EVO (MZ-V6E250BW) (NVME) |
| Samsung | PCIe3 x4 | SM951 (NVME) |
| Samsung | PCIe3 x4 | SM951 (MZHPV256HDGL) |
| Samsung | PCIe3 x4 | SM951 (MZHPV512HDGL) |
| Samsung | PCIe3 x4 | SM951 (NVME) |
| Samsung | PCIe x4 | XP941-512G (MZHPU512HCGL) |
| SanDisk | PCIe | SD6PP4M-128G |
| SanDisk | PCIe | SD6PP4M-256G |
| TEAM | PCIe3 x4 | TM8FP2240G0C101 |
| TEAM | PCIe3 x4 | TM8FP2480GC110 |
| WD | PCIe3 x4 | WDS256G1X0C-00ENX0 (NVME) |
| WD | PCIe3 x4 | WDS512G1X0C-00ENX0 (NVME) |

For the latest updates of M.2_SSD (NFGG) module support list, please visit our website for details: http://www.asrock.com

# Chapter 3 Software and Utilities Operation

## 3.1 Installing Drivers

The Support CD that comes with the motherboard contains necessary drivers and useful utilities that enhance the motherboard's features.

### Running The Support CD

To begin using the support CD, insert the CD into your CD-ROM drive. The CD automatically displays the Main Menu if "AUTORUN" is enabled in your computer. If the Main Menu does not appear automatically, locate and double click on the file "ASRSETUP.EXE" in the Support CD to display the menu.

### Drivers Menu

The drivers compatible to your system will be auto-detected and listed on the support CD driver page. Please click **Install All** or follow the order from top to bottom to install those required drivers. Therefore, the drivers you install can work properly.

### Utilities Menu

The Utilities Menu shows the application software that the motherboard supports. Click on a specific item then follow the installation wizard to install it.

## 3.2 ASRock Motherboard Utility (A-Tuning)

ASRock Motherboard Utility (A-Tuning) is ASRock's multi purpose software suite with a new interface, more new features and improved utilities.

### 3.2.1 Installing ASRock Motherboard Utility (A-Tuning)

ASRock Motherboard Utility (A-Tuning) can be downloaded from ASRock Live Update & APP Shop. After the installation, you will find the icon "ASRock Motherboard Utility (A-Tuning)" on your desktop. Double-click the "ASRock Motherboard Utility (A-Tuning)"  icon, ASRock Motherboard Utility (A-Tuning) main menu will pop up.

### 3.2.2 Using ASRock Motherboard Utility (A-Tuning)

There are five sections in ASRock Motherboard Utility (A-Tuning) main menu: Operation Mode, OC Tweaker, System Info, FAN-Tastic Tuning and Settings.

#### Operation Mode

Choose an operation mode for your computer.

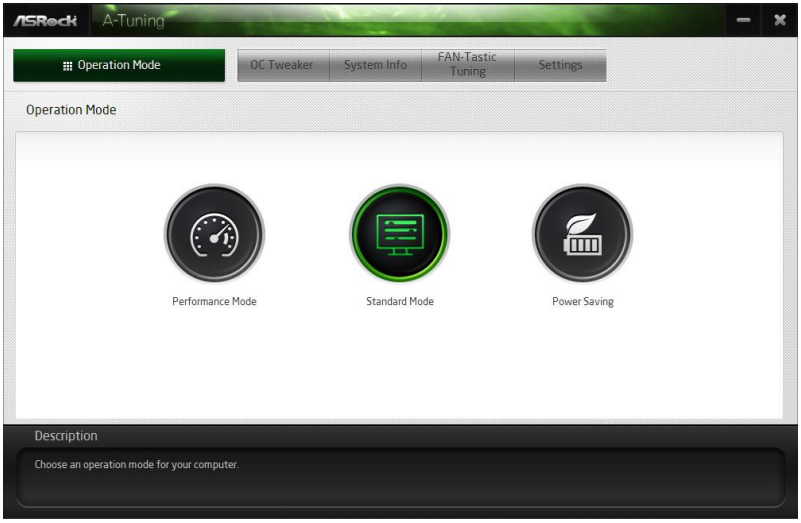

## OC Tweaker

Configurations for overclocking the system.

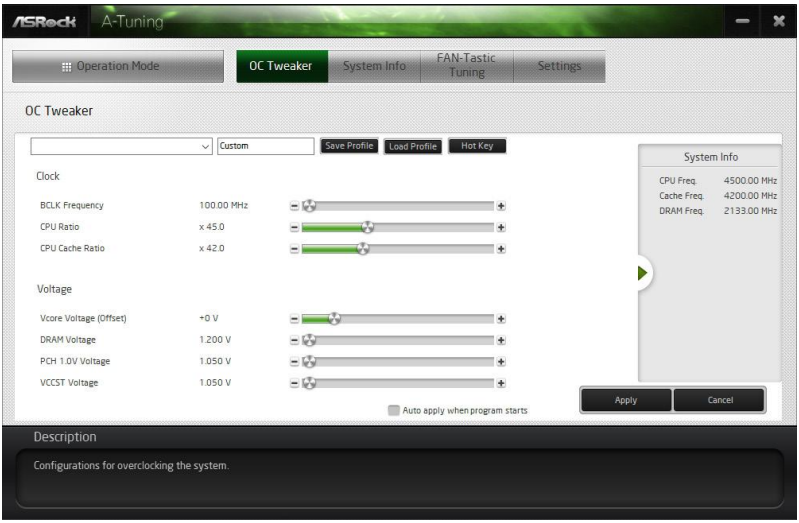


## System Info

View information about the system.

*The System Browser tab may not appear for certain models.

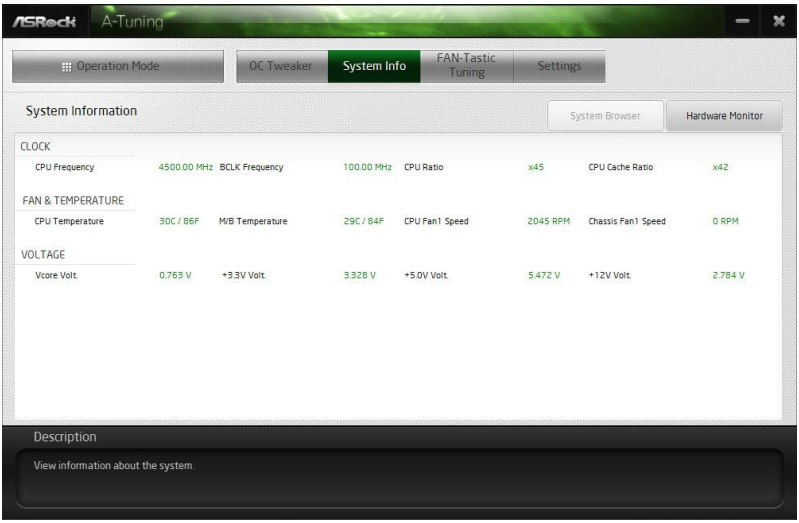

## FAN-Tastic Tuning

Configure up to five different fan speeds using the graph. The fans will automatically shift to the next speed level when the assigned temperature is met.

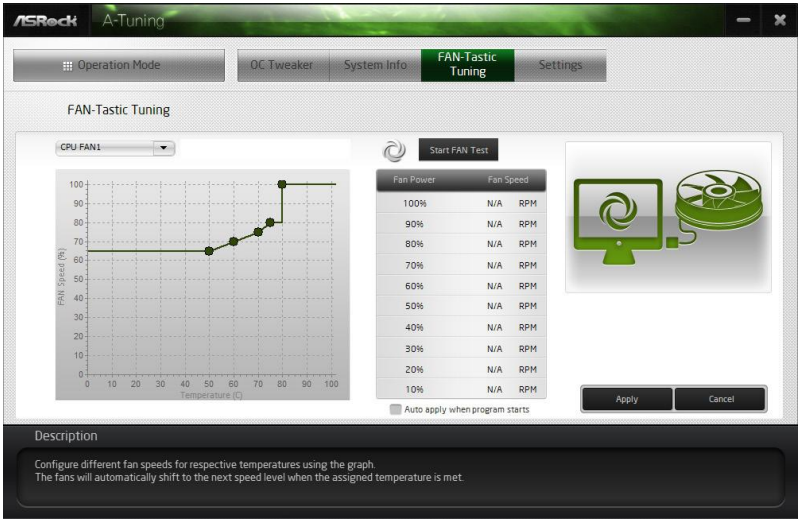


## Settings

Configure ASRock ASRock Motherboard Utility (A-Tuning). Click to select "Auto run at Windows Startup" if you want ASRock Motherboard Utility (A-Tuning) to be launched when you start up the Windows operating system.

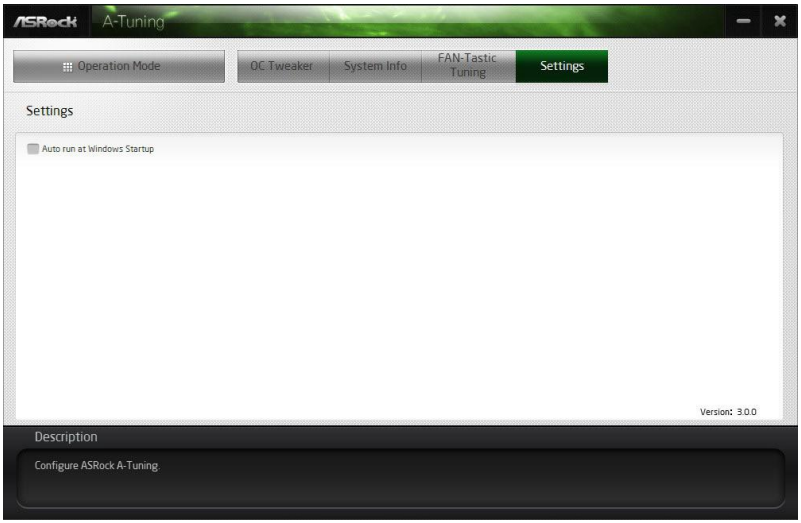

## 3.3 ASRock Live Update & APP Shop

The ASRock Live Update & APP Shop is an online store for purchasing and downloading software applications for your ASRock computer. You can quickly and easily install various apps and support utilities. With ASRock Live Update & APP Shop, you can optimize your system and keep your motherboard up to date simply with a few clicks.

Double-click on your desktop to access ASRock Live Update & APP Shop utility.

**You need to be connected to the Internet to download apps from the ASRock Live Update & APP Shop.*

### 3.3.1 UI Overview

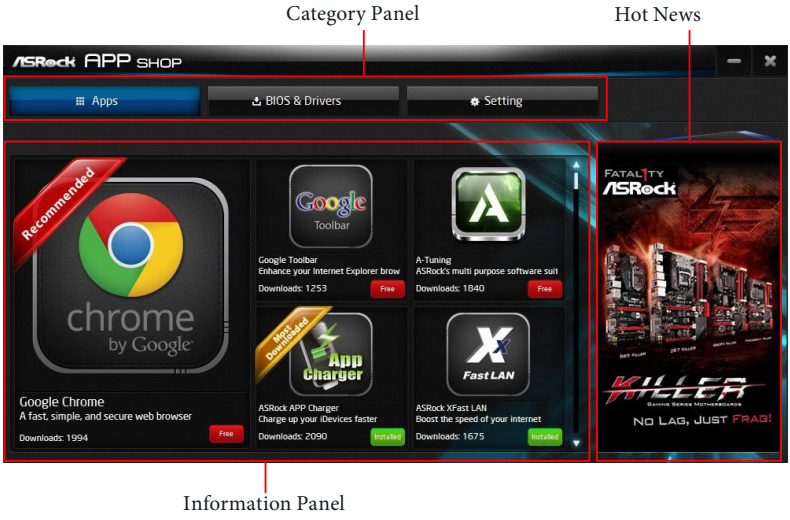


**Category Panel**: The category panel contains several category tabs or buttons that when selected the information panel below displays the relative information.

**Information Panel**: The information panel in the center displays data about the currently selected category and allows users to perform job-related tasks.

**Hot News**: The hot news section displays the various latest news. Click on the image to visit the website of the selected news and know more.

## 3.3.2 Apps

When the "Apps" tab is selected, you will see all the available apps on screen for you to download.

### Installing an App

***Step 1***

Find the app you want to install.




The most recommended app appears on the left side of the screen. The other various apps are shown on the right. Please scroll up and down to see more apps listed.

You can check the price of the app and whether you have already intalled it or not.

Free - The red icon displays the price or "Free" if the app is free of charge.

Installed - The green "Installed" icon means the app is installed on your computer.

***Step 2***

Click on the app icon to see more details about the selected app.

***Step 3***

If you want to install the app, click on the red icon Free to start downloading.




***Step 4***

When installation completes, you can find the green "Installed" icon appears on the upper right corner.

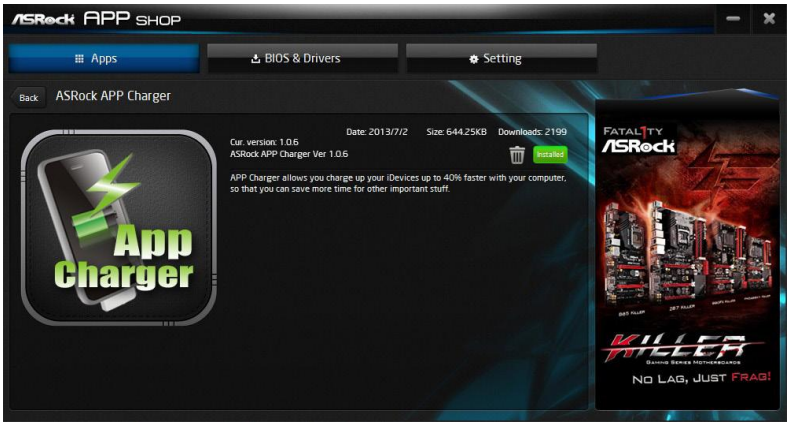


To uninstall it, simply click on the trash can icon .
*The trash icon may not appear for certain apps.

## Upgrading an App

You can only upgrade the apps you have already installed. When there is an available new version for your app, you will find the mark of "New Version" New Version appears below the installed app icon.




***Step 1***

Click on the app icon to see more details.

***Step 2***

Click on the yellow icon New Version to start upgrading.

## 3.3.3 BIOS & Drivers

### Installing BIOS or Drivers

When the "BIOS & Drivers" tab is selected, you will see a list of recommended or critical updates for the BIOS or drivers. Please update them all soon.

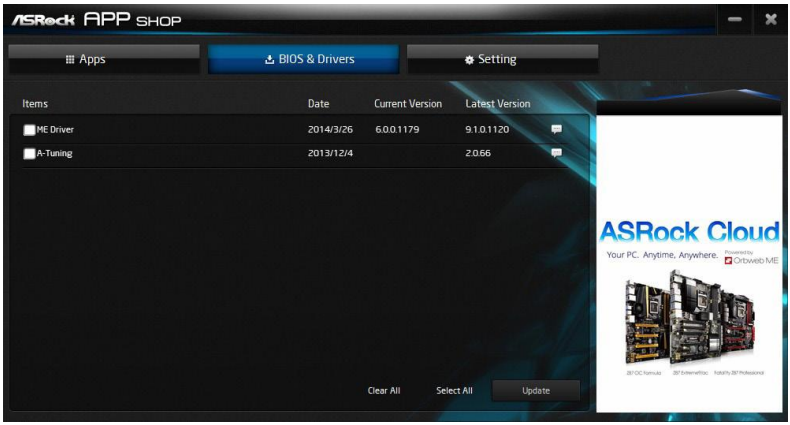


***Step 1***

Please check the item information before update. Click on to see more details.

***Step 2***

Click to select one or more items you want to update.

***Step 3***

Click Update to start the update process.

## 3.3.4 Setting

In the "Setting" page, you can change the language, select the server location, and determine if you want to automatically run the ASRock Live Update & APP Shop on Windows startup.

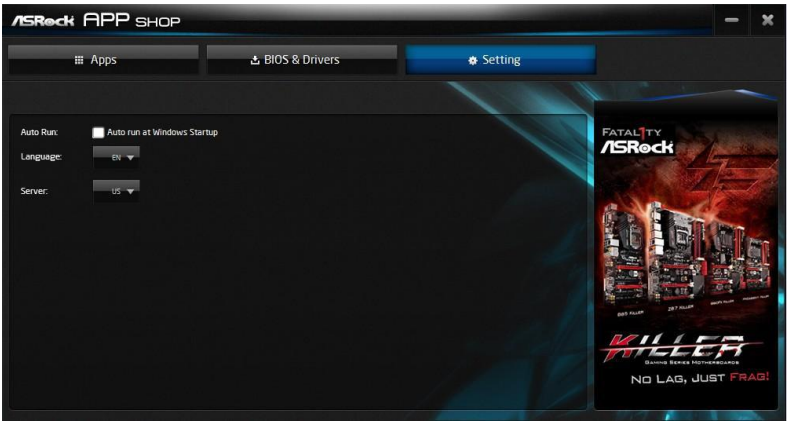

## 3.4 Nahimic Audio

Nahimic audio software provides an incredible high definition sound technology which boosts the audio and voice performance of your system. Nahimic Audio interface is composed of four tabs: Audio, Microphone, Sound Tracker and Settings.




There are four functions in Nahimic audio :

| No. | Function | Description |
|---|---|---|
| **1** | Audio | From this tab, you can mute the current audio device, choose between four factory audio profiles, turn all audio effects on/off, restores the current profile to its default settings and access Surround Sound and various features. |
| **2** | Microphone | From this tab, you can mute the current mic device, choose between two factory mic profiles, turn/off all microphone effects, restore the current profile to its default settings, and access Static Noise Suppression and various features. |
| **3** | Sound Tracker | The Sound Tracker provides a visual indication localizing the sources of the sounds while in a game. These are represented by dynamic segments pointing the direction of the sounds: the more opaque they are, the stronger the sounds are. |
| **4** | Settings | From this tab, you can access all settings and information of the software. |

## 3.5 ASRock Polychrome SYNC

ASRock Polychrome SYNC is a lighting control utility specifically designed for unique individuals with sophisticated tastes to build their own stylish colorful lighting system. Simply by connecting the LED strip, you can customize various lighting schemes and patterns, including Static, Breathing, Strobe, Cycling, Music, Wave and more.

### Connecting the LED Strip

Connect your RGB LED strips to the **RGB LED Headers (RGB_LED1, RGB_LED2)** on the motherboard.

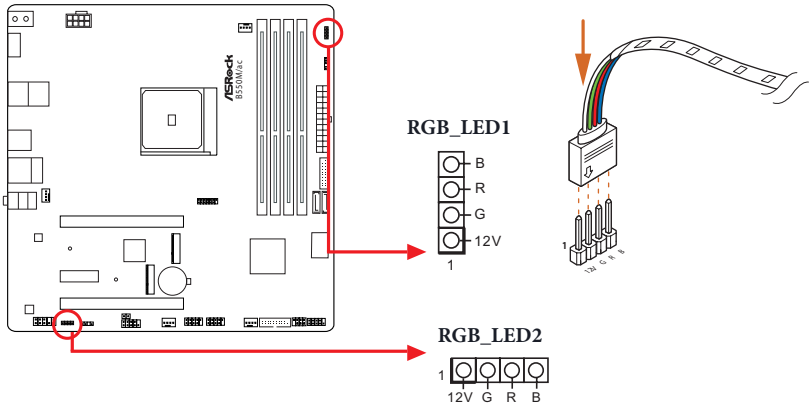


1. *Never install the RGB LED cable in the wrong orientation; otherwise, the cable may be damaged.*
2. *Before installing or removing your RGB LED cable, please power off your system and unplug the power cord from the power supply. Failure to do so may cause damages to motherboard components.*

1. *Please note that the RGB LED strips do not come with the package.*
2. *The RGB LED header supports standard 5050 RGB LED strip (12V/G/R/B), with a maximum power rating of 3A (12V) and length within 2 meters.*

English

## Connecting the Addressable RGB LED Strip

Connect your Addressable RGB LED strips to the **Addressable LED Headers (ADDR_LED1, ADDR_LED2)** on the motherboard.

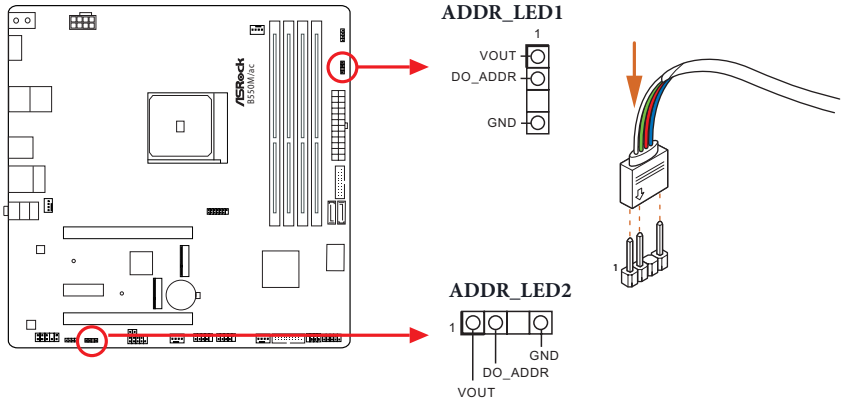


1. *Never install the RGB LED cable in the wrong orientation; otherwise, the cable may be damaged.*
2. *Before installing or removing your RGB LED cable, please power off your system and unplug the power cord from the power supply. Failure to do so may cause damages to motherboard components.*

1. *Please note that the RGB LED strips do not come with the package.*
2. *The RGB LED header supports WS2812B addressable RGB LED strip (5V/Data/GND), with a maximum power rating of 3A (5V) and length within 2 meters.*

## ASRock Polychrome SYNC Utility

Now you can adjust the RGB LED color through the ASRock Polychrome SYNC Utility. Download this utility from the ASRock Live Update & APP Shop and start coloring your PC style your way!

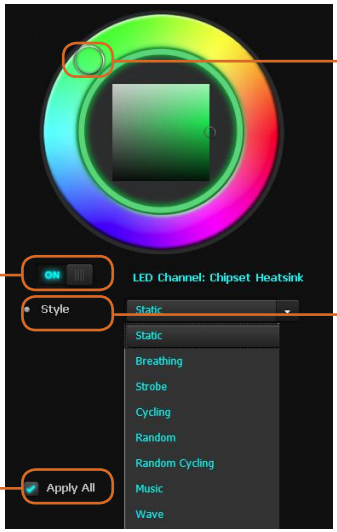

# Chapter 4 UEFI SETUP UTILITY

## 4.1 Introduction

This section explains how to use the UEFI SETUP UTILITY to configure your system. You may run the UEFI SETUP UTILITY by pressing <F2> or <Del> right after you power on the computer, otherwise, the Power-On-Self-Test (POST) will continue with its test routines. If you wish to enter the UEFI SETUP UTILITY after POST, restart the system by pressing <Ctl> + <Alt> + <Delete>, or by pressing the reset button on the system chassis. You may also restart by turning the system off and then back on.

*Because the UEFI software is constantly being updated, the following UEFI setup screens and descriptions are for reference purpose only, and they may not exactly match what you see on your screen.*

### 4.1.1 UEFI Menu Bar

The top of the screen has a menu bar with the following selections:

| | |
|---|---|
| **Main** | For setting system time/date information |
| **OC Tweaker** | For overclocking configurations |
| **Advanced** | For advanced system configurations |
| **Tool** | Useful tools |
| **H/W Monitor** | Displays current hardware status |
| **Security** | For security settings |
| **Boot** | For configuring boot settings and boot priority |
| **Exit** | Exit the current screen or the UEFI Setup Utility |

## 4.1.2 Navigation Keys

Use <←> key or <→> key to choose among the selections on the menu bar, and use < ↑ > key or < ↓ > key to move the cursor up or down to select items, then press <Enter> to get into the sub screen. You can also use the mouse to click your required item.

Please check the following table for the descriptions of each navigation key.

| Navigation Key(s) | Description |
|---|---|
| **+ / -** | To change option for the selected items |
| **<Tab>** | Switch to next function |
| **<PGUP>** | Go to the previous page |
| **<PGDN>** | Go to the next page |
| **<HOME>** | Go to the top of the screen |
| **<END>** | Go to the bottom of the screen |
| **<F1>** | To display the General Help Screen |
| **<F7>** | Discard changes and exit the SETUP UTILITY |
| **<F9>** | Load optimal default values for all the settings |
| **<F10>** | Save changes and exit the SETUP UTILITY |
| **<F12>** | Print screen |
| **<ESC>** | Jump to the Exit Screen or exit the current screen |

## 4.2 Main Screen

When you enter the UEFI SETUP UTILITY, the Main screen will appear and display the system overview.



## 4.3 OC Tweaker Screen

In the OC Tweaker screen, you can set up overclocking features.




*Because the UEFI software is constantly being updated, the following UEFI setup screens and descriptions are for reference purpose only, and they may not exactly match what you see on your screen.*

### Overclock Mode(Bus Speed)

Select the overclock mode. Warning! When overclocking also the PCIe, PCI, SATA and USB busses will be overcloked which may cause instability or failure. Please install an operating system and the drivers required before overclocking, or else your HDD's may be undetectable. Overclocking is not supported if the monitor is connected via the onboard D-Bus/VGA connector.

### CPU Frequency and Voltage(VID) Change

If this item is set to [Manual], the multiplier and voltage will be set based on user selection. Final result is depending on the CPU's capability.

### CPU Core (Per CCX)

### CPU Voltage

Specifies a custom CPU core voltage (mV), Should be combined with a custom CPU core

frequency. Power saving features for idle cores (e.g. cc6 sleep) remain active.

### CCD0

### CCX0 Frequency (MHz)

Use this item to adjust CCX0 Frequency.

### CCX1 Frequency (MHz)

Use this item to adjust CCX1 Frequency.

### CCD1

### CCX0 Frequency (MHz)

Use this item to adjust CCX0 Frequency.

### CCX1 Frequency (MHz)

Use this item to adjust CCX1 Frequency.

### SoC/Uncore OC Voltage(VID)

Specify the SoC/Uncore voltage (VDD_SOC) in mV to support memory and Infinity Fabric overclocking. VDD_SOC also determines the GPU voltage on processors with integrated graphics. “SoC/Uncore OC Mode” needs to be enabled to force this voltage.

### CLD0 VDDP Voltage Control

AMD Overclocking Setup VDDP is a voltage for the DDR4 bus signaling (PHY), and it is derived from your DRAM Voltage (VDDIO_Mem). As a result, VDDP voltage in mV can approach but not exceed your DRAM Voltage.

### CLD0 VDDG CCD Voltage Control

AMD Overclocking Setup VDDG CCD represents voltage for the data portion of the Infinity Fabric. It is derived from the CPU SoC/Uncore Voltage (VDD_SOC). VDDG can approach but not exceed VDD_SOC.

### CLD0 VDDG IOD Voltage Control

AMD Overclocking Setup VDDG IOD represents voltage for the data portion of the Infinity Fabric. It is derived from the CPU SoC/Uncore Voltage (VDD_SOC). VDDG can approach but not exceed VDD_SOC.

## DRAM Information

### Load XMP Setting

Load XMP settings to overclock the memory and perform beyond standard specifications.

### DRAM Frequency

If [Auto] is selected, the motherboard will detect the memory module(s) inserted and assign the appropriate frequency automatically. Setting DRAM Frequency can adjust DRAM Timing.

### DRAM Voltage

Configure the voltage for the DRAM Voltage.

### Infinity Fabric Frequency and Dividers

AMD Overclocking Setup Set Infinity Fabric frequency (FCLK). Auto: FCLK = MCLK. Manual: FCLK must be less than or equal to MCLK for best performance in most cases. Latency penalties are incurred if FCLK and MCLK are mismatched, but sufficiently high MCLK can negate or overcome this penalty.

## DRAM Timing Configuration

## External Voltage Settings and Load-line Calibration

### CPU Vcore Voltage

Input voltage for the processor by the external voltage regulator.

### CPU Load-Line Calibration

CPU Load-Line Calibration helps prevent CPU voltage droop when the system is under heavy loading.

### VDDCR_SOC Voltage

Input voltage for the processor by the external voltage regulator.

### VDDCR_SOC Load-Line Calibration

VDDCR_SOC Load-Line Calibration helps prevent VDDCR_SOC voltage droop when the system is under heavy loading.

### VPPM

Configure the voltage for the VPPM.

### 2.50V Voltage

Configure the voltage for the 2.50V PROM Voltage.

### CPU VDD 1.8V Voltage

Configure the voltage for the CPU VDD 1.8V Voltage. The default value is [Auto].

### Save User Default

Type a profile name and press enter to save your settings as user default.

### Load User Default

Load previously saved user defaults.

### Save User UEFI Setup Profile to Disk

It helps you to save current UEFI settings as an user profile to disk.

### Load User UEFI Setup Profile from Disk

You can load previous saved profile from the disk.

## 4.4 Advanced Screen

In this section, you may set the configurations for the following items: CPU Configuration, Onboard Devices Configuration, Storage Configuration, ACPI Configuration, Trusted Computing, AMD CBS, AMD PBS and AMD Overclocking.

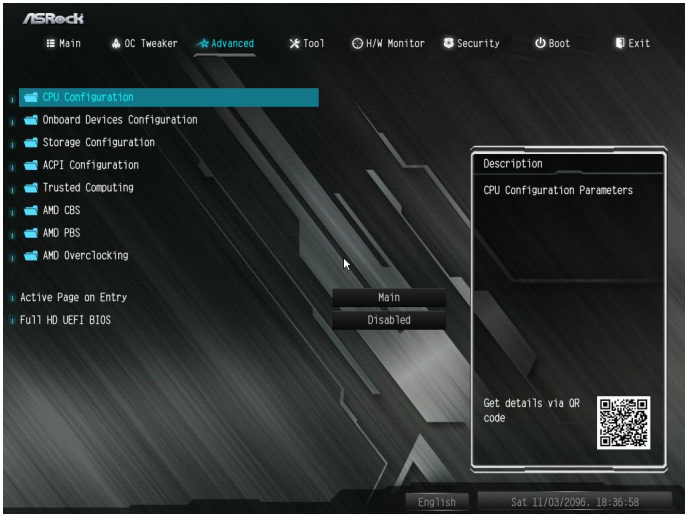


*Setting wrong values in this section may cause the system to malfunction.*

### UEFI Configuration

### Active Page on Entry

Select the default page when entering the UEFI setup utility.

### Full HD UEFI

When [Auto] is selected, the resolution will be set to 1920 x 1080 if the monitor supports Full HD resolution. If the monitor does not support Full HD resolution, then the resolution will be set to 1024 x 768. When [Disable] is selected, the resolution will be set to 1024 x 768 directly.

## 4.4.1 CPU Configuration




### PSS Support

Use this to enable or disable the generation of ACPI_PPC, _PSS, and _PCT objects.

### NX Mode

Use this to enable or disable NX mode.

### SVM Mode

When this is set to [Enabled], a VMM (Virtual Machine Architecture)can utilize the additional hardware capabilities provided by AMD-V. The default value is [Enabled]. Coniguration options: [Enabled] and [Disabled].

### SMT Mode

This item can be used to disable symmetric multithreading. To re-enable SMT, a power cycle is needed after selecting [Auto].
Warning: S3 is not supported on systems where SMT is disabled.

### AMD fTPM Switch

Use this to enable or disable AMD CPU fTPM.

## 4.4.2 Onboard Devices Configuration




### Turn On LED in S5

Turn on LED in the ACPI S5 state.

### SR-IOV Support

Enable/disable the SR-IOV (Single Root IO Virtualization Support) if the system has SR-IOV capable PCIe devices.

### UMA Frame buffer Size (Only for processor with integrated graphics)

This item allows you to set the size of the UMA frame buffer.

### Gnb HD Audio

Enable/disable onboard HD audio. Set to Auto to enable onboard HD audio and automatically disable it when a sound card is installed.

### Front Panel

Enable/disable front panel HD audio.

### Restore on AC/Power Loss

Select the power state after a power failure. If [Power Off] is selected, the power will remain off when the power recovers. If [Power On] is selected, the system will start to boot up when the power recovers.

### WAN Radio

Configure the WiFi module's connectivity.

### BT On/Off

Enable/disable the bluetooth.

### PS2 Y-Cable

Enable the PS2 Y-Cable or set this option to Auto.

## 4.4.3 Storage Configuration




### SATA Mode

AHCI: Supports new features that improve performance.

RAID: Combine multiple disk drives into a logical unit.

### SATA Hot Plug

Enable/disable the SATA Hot Plug function.

## 4.4.4 ACPI Configuration

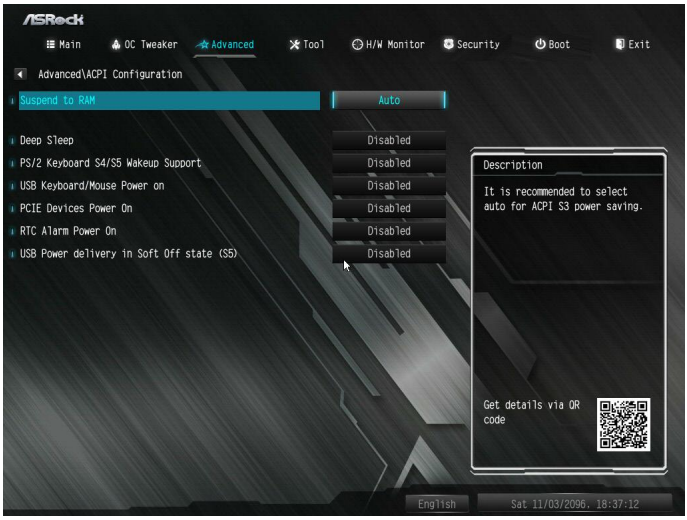


### Suspend to RAM

It is recommended to select auto for ACPI S3 power saving.

### Deep Sleep

Configure deep sleep mode for power saving when the computer is shut down.

### PS/2 Keyboard S4/S5 Wakeup Support

Allow the system to be waked up by a PS/2 Keyboard in S4/S5.

### USB Keyboard/Mouse Power On

Allow the system to be waked up by an USB Keyboard/Mouse device.

### PCIE Devices Power On

Allow the system to be waked up by a PCIE device and enable wake on LAN.

### RTC Alarm Power On

Allow the system to be waked up by the real time clock alarm. Set it to By OS to let it be handled by your operating system.

### USB Power Delivery in Soft Off State (S5)

If this option is enabled, the USB port will provide power to your devices even when the system is in Power State S5.

## 4.4.5 Trusted Computing

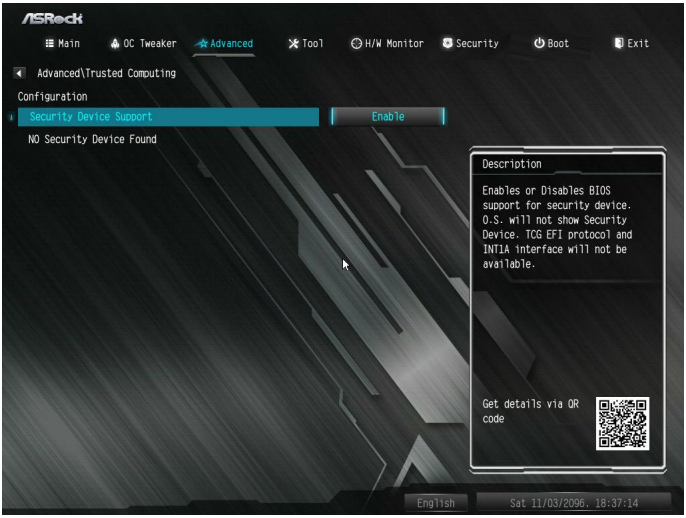


### Security Device Support

Enable or disable BIOS support for security device.

## 4.4.6 AMD CBS

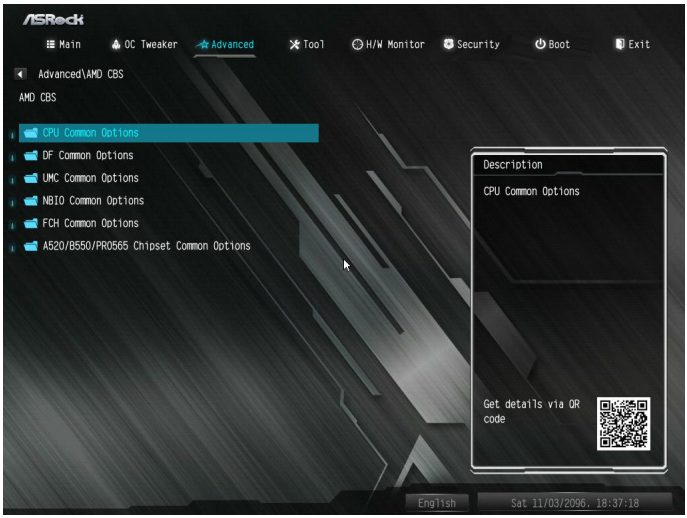


The AMD CBS menu accesses AMD specific features.

## 4.4.7 AMD PBS




The AMD PBS menu accesses AMD specific features.

## 4.4.8 AMD Overclocking

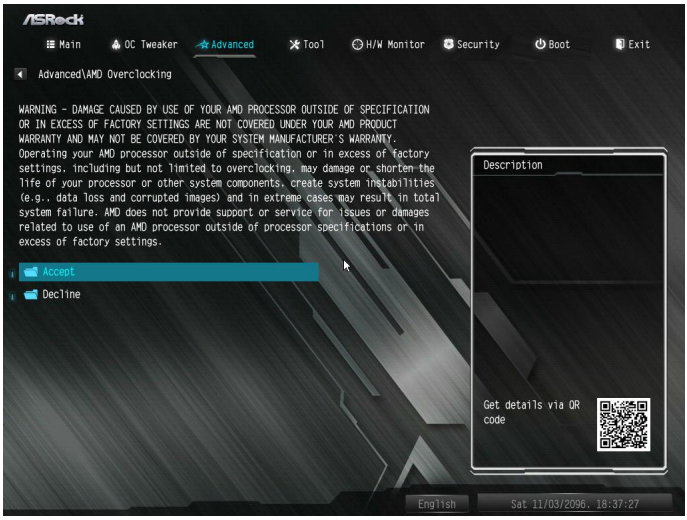


The AMD Overclocking menu accesses options for configuring CPU frequency and voltage.

## 4.5 Tools




### Easy RAID Installer

Easy RAID Installer helps you to copy the RAID driver from the support CD to your USB storage device. After copying the drivers please change the SATA mode to RAID, then you can start installing the operating system in RAID mode.

### SSD Secure Erase Tool

Use this tool to securely erase SSD.

### NVME Sanitization Tool

After you sanitize SSD, all user data will be permantly destroyed on the SSD and cannot be recovered.

### Instant Flash

Save UEFI files in your USB storage device and run Instant Flash to update your UEFI.

## 4.6 Hardware Health Event Monitoring Screen

This section allows you to monitor the status of the hardware on your system, including the parameters of the CPU temperature, motherboard temperature, fan speed and voltage.

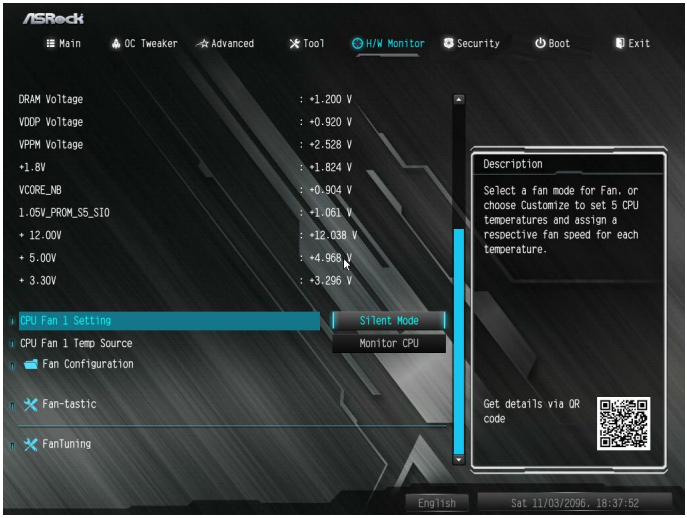


### CPU FAN1 Setting

Select a fan mode for CPU Fan 1, or choose Customize to set 5 CPU temperatures and assign a respective fan speed for each temperature.

### CPU FAN1 Temp Source

Select a fan temperature source for CPU Fan 1.

### FAN Configuration

### CHA_FAN1/WP Switch

Select CHA_FAN1 or Water Pump mode.

### Chassis Fan 1 Control Mode

Select PWM mode or DC mode for Chassis Fan 1 .

### Chassis Fan 1 Setting

Select a fan mode for Chassis Fan 1, or choose Customize to set 5 CPU temperatures and assign a respective fan speed for each temperature.

### Chassis Fan 1 Temp Source

Select a fan temperature source for Chassis Fan 1.

### CHA_FAN2/WP Switch

Select CHA_FAN2 or Water Pump mode.

### Chassis Fan 2 Control Mode

Select PWM mode or DC mode for Chassis Fan 2 .

### Chassis Fan 2 Setting

Select a fan mode for Chassis Fan 2, or choose Customize to set 5 CPU temperatures and assign a respective fan speed for each temperature.

### Chassis Fan 2 Temp Source

Select a fan temperature source for Chassis Fan 2.

### CHA_FAN4/WP Switch

Select CHA_FAN4 or Water Pump mode.

### Chassis Fan 4 Control Mode

Select PWM mode or DC mode for Chassis Fan 4.

### Chassis Fan 4 Setting

Select a fan mode for Chassis Fan 4, or choose Customize to set 5 CPU temperatures and assign a respective fan speed for each temperature.

### Chassis Fan 4 Temp Source

Select a fan temperature source for Chassis Fan 4.

### Fan-Tastic

Select a fan mode for Fan, or choose Customize to set 5 CPU temperatures and assign a respective fan speed for each temperature.

### FanTuning

Detect the lowest fan speed in the system. Iy may take 3-5 minutes to complete.

## 4.7 Security Screen

In this section you may set or change the supervisor/user password for the system. You may also clear the user password.

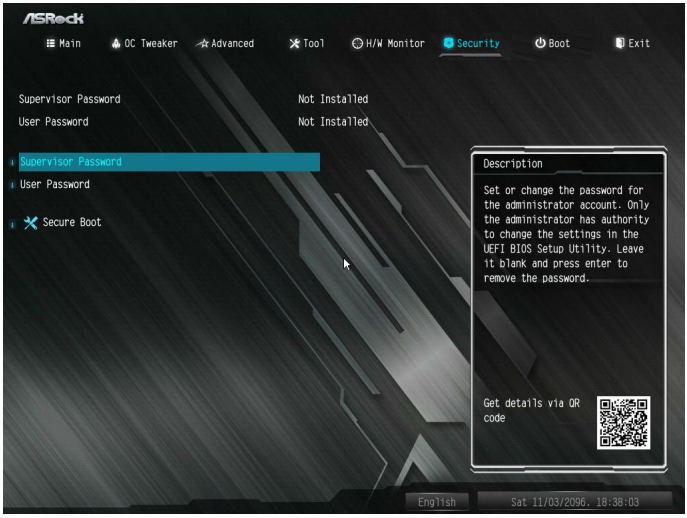


### Supervisor Password

Set or change the password for the administrator account. Only the administrator has authority to change the settings in the UEFI Setup Utility. Leave it blank and press enter to remove the password.

### User Password

Set or change the password for the user account. Users are unable to change the settings in the UEFI Setup Utility. Leave it blank and press enter to remove the password.

### Secure Boot

Enable to support Secure Boot.

## 4.8 Boot Screen

This section displays the available devices on your system for you to configure the boot settings and the boot priority.

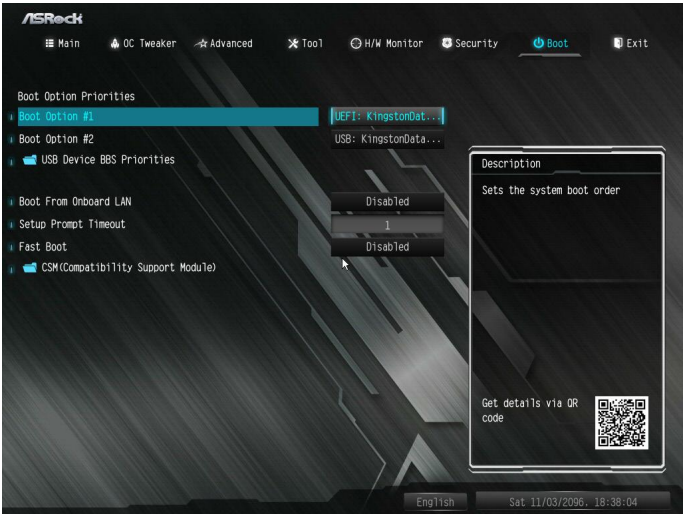


### Boot From Onboard LAN

Allow the system to be waked up by the onboard LAN.

### Setup Prompt Timeout

Configure the number of seconds to wait for the setup hot key.

### Fast Boot

Fast Boot minimizes your computer's boot time. In fast mode you may not boot from an USB storage device.

## CSM (Compatibility Support Module)




### CSM

Enable to launch the Compatibility Support Module. Please do not disable unless you're running a WHCK test.

### Launch PXE OpROM Policy

Select UEFI only to run those that support UEFI option ROM only. Select Legacy only to run those that support legacy option ROM only. Select Do not launch to not execute both legacy and UEFI option ROM.

### Launch Storage OpROM Policy

Select UEFI only to run those that support UEFI option ROM only. Select Legacy only to run those that support legacy option ROM only. Select Do not launch to not execute both legacy and UEFI option ROM.

### Bootup Num-Lock

Select whether Num Lock should be turned on or off when the system boots up.

### Full Screen Logo

Enable to display the boot logo or disable to show normal POST messages.

## AddOn ROM Display

Enable AddOn ROM Display to see the AddOn ROM messages or configure the AddOn ROM if you've enabled Full Screen Logo. Disable for faster boot speed.

## 4.9 Exit Screen

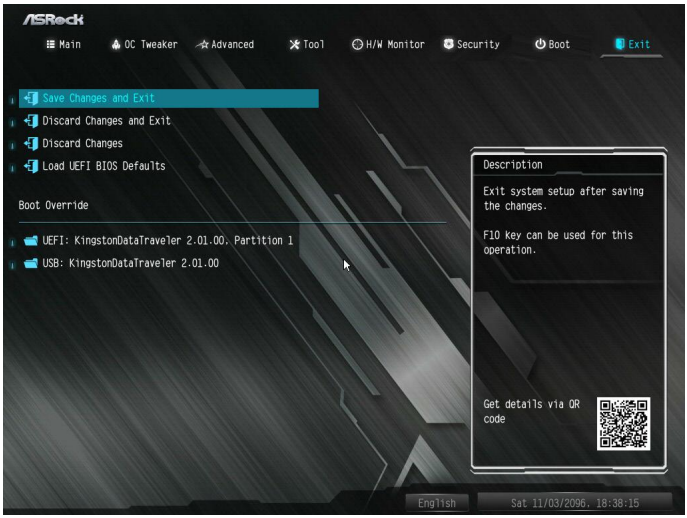


### Save Changes and Exit

When you select this option the following message, "Save configuration changes and exit setup?" will pop out. Select [OK] to save changes and exit the UEFI SETUP UTILITY.

### Discard Changes and Exit

When you select this option the following message, "Discard changes and exit setup?" will pop out. Select [OK] to exit the UEFI SETUP UTILITY without saving any changes.

### Discard Changes

When you select this option the following message, "Discard changes?" will pop out. Select [OK] to discard all changes.

### Load UEFI BIOS Defaults

Load UEFI BIOS Default values for all the setup questions. The F9 key can be used for this operation.

## Contact Information

If you need to contact ASRock or want to know more about ASRock, you're welcome to visit ASRock's website at http://www.asrock.com; or you may contact your dealer for further information. For technical questions, please submit a support request form at https://event.asrock.com/tsd.asp

**ASRock Incorporation**

2F., No.37, Sec. 2, Jhongyang S. Rd., Beitou District,

Taipei City 112, Taiwan (R.O.C.)

**ASRock EUROPE B.V.**

Bijsterhuizen 11-11

6546 AR Nijmegen

The Netherlands

Phone: +31-24-345-44-33

Fax: +31-24-345-44-38

**ASRock America, Inc.**

13848 Magnolia Ave, Chino, CA91710

U.S.A.

Phone: +1-909-590-8308

Fax: +1-909-590-1026

# DECLARATION OF CONFORMITY

Per FCC Part 2 Section 2.1077(a)

**Responsible Party Name:** ASRock Incorporation

**Address:** 13848 Magnolia Ave, Chino, CA91710

**Phone/Fax No:** +1-909-590-8308/+1-909-590-1026

hereby declares that the product

**Product Name : Motherboard**

**Model Number : B550M/ac**

Conforms to the following specifications:

☒ FCC Part 15, Subpart B, Unintentional Radiators

**Supplementary Information:**

This device complies with part 15 of the FCC Rules. Operation is subject to the following two conditions: (1) This device may not cause harmful interference, and (2) this device must accept any interference received, including interference that may cause undesired operation.

Representative Person's Name: **James**

Signature :

Date : **May 12, 2017**

# EU Declaration of Conformity

For the following equipment:

**Motherboard**

(Product Name)

**B550M/ac / ASRock**

(Model Designation / Trade Name)

**ASRock Incorporation**

(Manufacturer Name)

**2F., No.37, Sec. 2, Jhongyang S. Rd., Beitou District, Taipei City 112, Taiwan (R.O.C.)**

(Manufacturer Address)

☒ **EMC —Directive 2014/30/EU (from April 20th, 2016)**

- ☐ EN 55022:2010/AC:2011 Class B
- ☒ EN 55024:2010/A1:2015
- ☒ EN 55032:2012+AC:2013 Class B
- ☒ EN 61000-3-3:2013
- ☒ EN 61000-3-2:2014

☒ **RED—Directive 2014/53/EU**

- ☐ EN 300 328 V2.1.1
- ☒ EN 301 489-17 V3.1.1
- ☐ EN 301 893 V2.1.1
- ☐ EN 301 489-3 V2.1.1
- ☐ EN 300 220 V3.1.1

☐ **LVD —Directive 2014/35/EU (from April 20th, 2016)**

- ☐ EN 60950-1 : 2011+ A2: 2013
- ☐ EN 60950-1 : 2006/A12: 2011

☒ RoHS — Directive 2011/65/EU

☒ CE marking

CE

(EU conformity marking)

**ASRock EUROPE B.V.**

(Company Name)

**Bijsterhuizen 1111 6546 AR Nijmegen The Netherlands**

(Company Address)

Person responsible for making this declaration:



(Name, Surname)

**A.V.P**

(Position / Title)

**August 21, 2020**

(Date)

P/N: 15G062246000AK V1.0